B-SERIES

PARTS COUNTERMAN'S CATALOG

Section 6A
Level Winds & Counters

A222811 HOSE GUIDE TUBE ASSEMBLY
FOR LEVEL WINDS WITH COUNTERS

Part No.	Description	Qty	UM
A222810	TUBE, HOSE GUIDE	1	EA
A152630	ROLLER, 2" ALUMINUM	2	EA
A104486	SCREW, CAP, 3/8-16 X 3-1/4", HEX	2	EA
A107018	NUT, LOCK, CRIMPED, 3/8-16, GR8 PLTD	2	EA

Please note: *The A222811 assembly is not a normally stocked item, however the components are. If you are in a hurry for this assembly, it would be quicker to order the components separately and assemble it yourself.*

B-SERIES REAR REEL LEVEL WINDS

When ordering replacement manual level winds for B-Series machines, it will be necessary to determine whether the unit has the old style or new style level wind. The old design was phased out in late 2006 and early 2007. The newer level winds features spring loaded quick release pins (spring latches). One to release the level wind from it's parked position and another to adjust the length were the arm telescopes. These designs are not directly interchangeable - in order to retrofit the newer design onto an older machine the newer style pin mount assembly p/n A384640, (below left illustration) will have to be welded in place of the old.

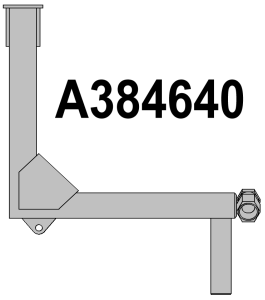

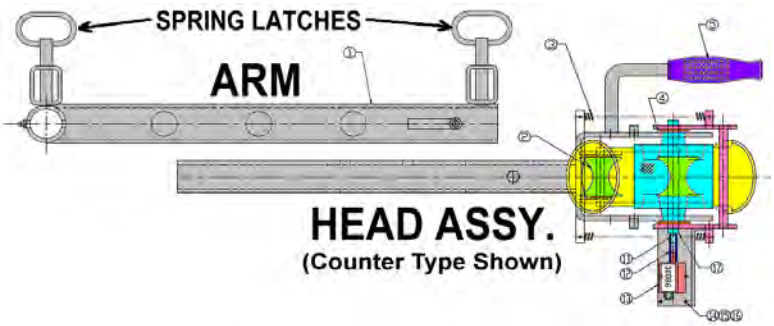

PHOTO OF COMPLETE ASSEMBLY	DESCRIPTION	COMPLETE (WITH ARM)	HEAD ONLY (W/O ARM)
	Old style without counter	A240496	A240529
	Newer "Spring Latch" style without counter	A240496-7 *(holds ¾" nozzles)* A240496-2 *(holds 1" nozzles)*	A240529-2
	Old style with counter	A240695	A380340
	Newer "Spring Latch" style with counter	A240695-7 *(holds ¾" nozzles)* A240695-3 *(holds 1" nozzles)*	A380340-3
		A240695-3-METER (w/Metric Counter)	N/A

PART NO.: 240695-7	DESCRIPTION: LEVEL WIND W/ COUNTER, 3/4" NOZZLES		
ITEM	PART NO.	REQ'D.	DESCRIPTION
1	240098-2	1	SUPPORT ARM MODIFICATION
2	152630	2	ROLLER
3	220920	2	SPRING
4	107226	2	WASHER, 1/2",FLAT,PLTD,
5	220940	1	HAND GRIP
6	152040	1	GREASE NIPPLE
7	240686	1	LEVEL WIND HANDLE
8	-	-	-
9	240871-2	1	FRAME ASS'Y- LEVEL WIND
10	222810	1	HOSE GUIDE TUBE
11	234264-10	1	ROUND BAR 1/8"DIA. X 1"LONG
12	234265-10	1	PLASTIC TUBE 1 1/4" LONG
13	220980	1	COUNTER
14	107004	4	NUT #6-32. HEX. PLTD.
15	103548	4	SCREW,#6-32X3/4",ROUND MACHINE
16	107286	4	WASHER,#6,LOCK,PLTD,
17	222857	1	SHAFT 1/2"DIA.
18	222820	1	COUNTER OPERATING ROLLER
19	242194	1	WELDMENT COUNTER ROLLER BRKT.
20	104418	2	SHOULDER BOLT
21	107220	6	3/8" FLAT WASHER
22	104468	2	SCREW 3/8"-16X2-1/2".HEX PLTD
23	107018	2	3/8"-16 HEX NUT,NYLOCK PLTD.
24	380598	1	WASHER FOR PIN ON LEVEL WIND
25	-	-	-
26	-	-	-
27	-	-	-

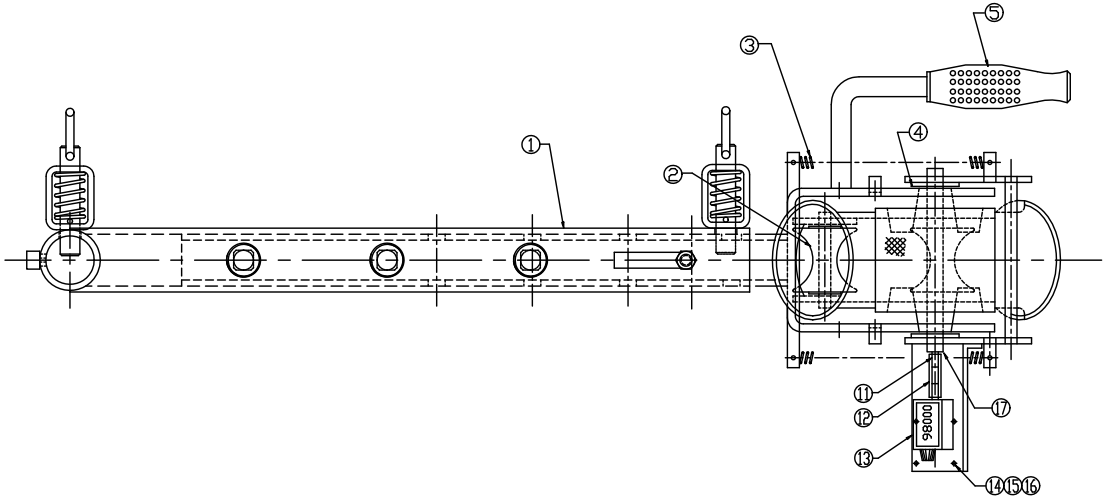

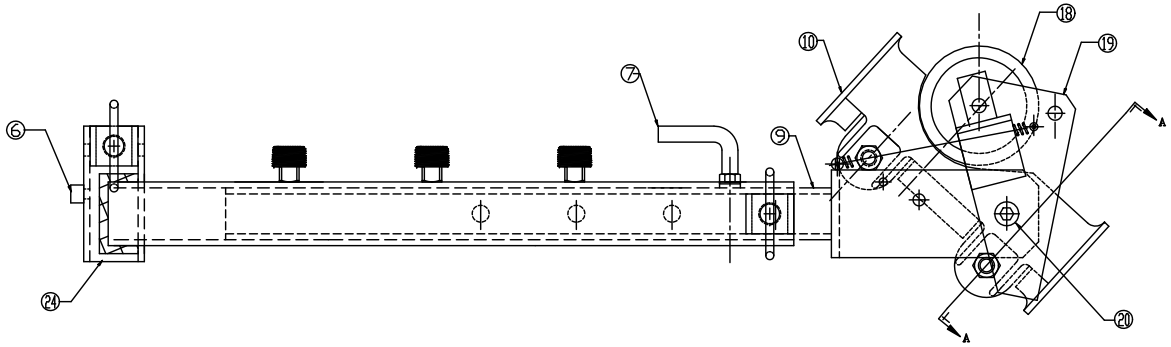

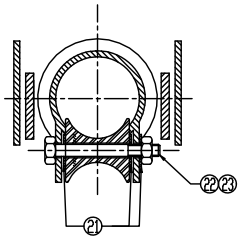

A-A SECTION

DO NOT SCALE

REV.	DESCRIPTION	DATE	BY	NEXT ASSY.
				-
D				-
C				-
B				-
A				

UNLESS OTHERWISE SPECIFIED

√=125 MICROINCHES
BREAK ALL EDGES
FABRICATION TOL. ± 1/16"
ANGULAR ± 1°

MACHINING TOLERANCES
FRACTIONAL ± .015
DECIMAL ± .010
XXX ± .005

THIS DOCUMENT IS THE PROPERTY OF HI-VAC, CORP. AND IS FURNISHED FOR AUTHORIZED USE ONLY, NEITHER THIS DOCUMENT NOR THE INFORMATION DISCLOSED HEREIN SHALL BE COPIED, REPRODUCED, TRANSFERRED OR USED FOR MANUFACTURING OR FOR ANY OTHER PURPOSE EXCEPT AS AUTHORIZED IN WRITING BY HI-VAC, CORP.

AQUATECH
A PRODUCT OF HI-VAC CORPORATION
117 INDUSTRY ROAD MARIETTA, OHIO 45750 USA
PHONE +740.374.9171 FAX +740.374.5447

SCALE: NONE	WEIGHT:	DRAWN BY: CGT	PRODUCT CODE:
DWG SIZE: C	DATE: 16MAY13	CHECKED BY:	B-SERIES

DESCRIPTION: LEVEL WIND WITH COUNTER, 3/4" NOZZLES

MATERIAL: SEE B.O.M.
RAW MAT'L.:

PART NUMBER: 240695-7

REV:

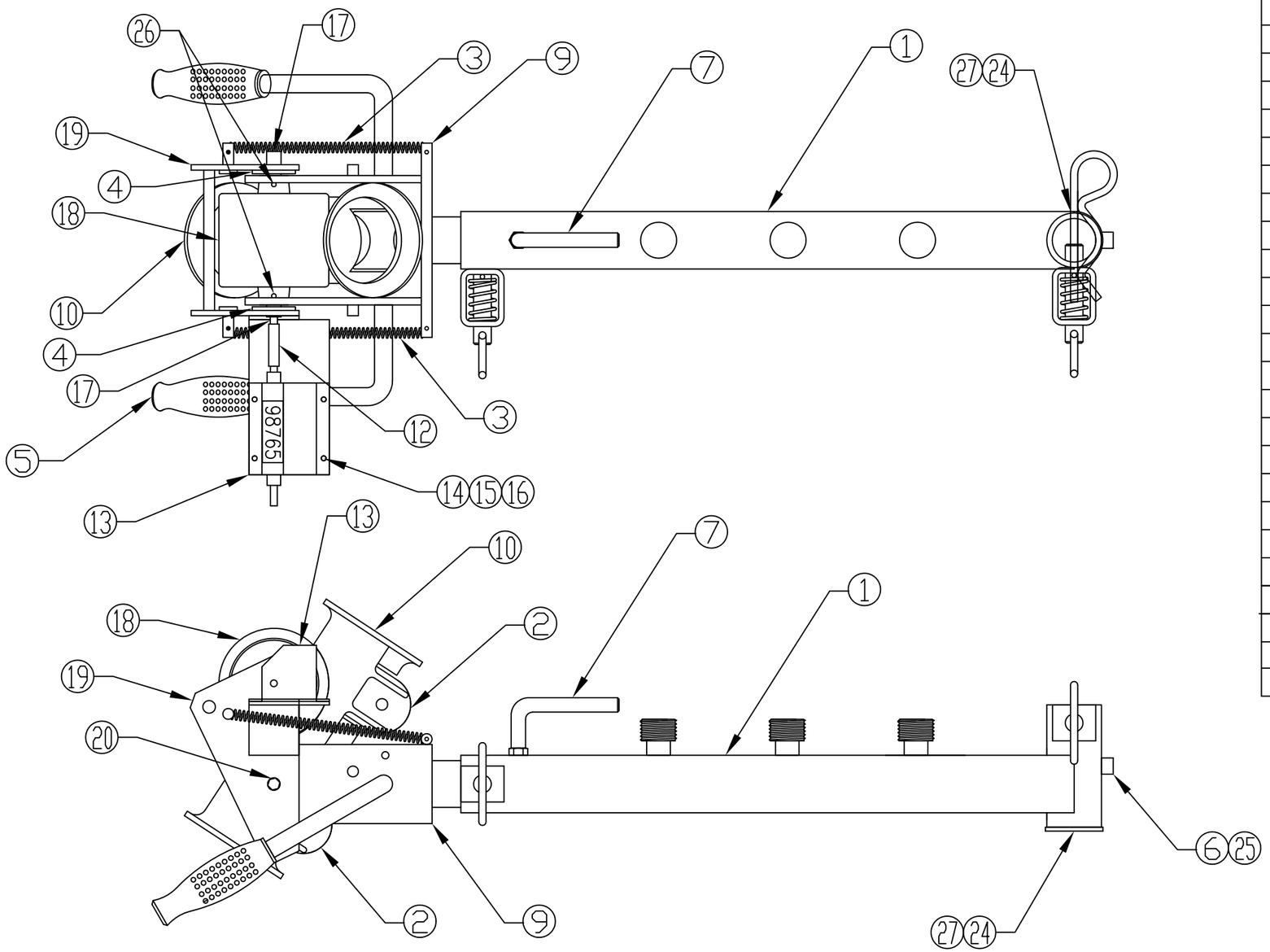

PART NO.: 240695-10		DESCRIPTION: LEVEL WIND WITH R.H. COUNTER	
ITEM	PART NO.	REQ'D.	DESCRIPTION
1	240098-2	1	SUPPORT ARM MODIFICATION
2	152630	2	ROLLER
3	220920	2	SPRING
4	107226	2	WASHER, 1/2",FLAT,PLTD,
5	220940	2	HAND GRIP
6	152040	1	GREASE NIPPLE
7	240686	1	LOCK HANDLE, LEVEL WIND
8	-	-	-
9	240871-6	1	FRAME ASS'Y- LEVEL WIND
10	222810	1	HOSE GUIDE TUBE
11	-	-	-
12	384980	1	3/16" ID PLASTIC TUBE X 2" LONG
13	220976-1	1	COUNTER
14	107004	4	NUT #6-32. HEX. PLTD.
15	103548	4	SCREW,#6-32X3/4",ROUND MACHINE
16	107286	4	WASHER,#6,LOCK,PLTD,
17	222857-1	1	SHAFT 1/2"DIA.
18	222820	1	COUNTER OPERATING ROLLER
19	242194-1	1	WELDMENT COUNTER ROLLER BRKT.
20	104418	2	SHOULDER BOLT
21	107220	6	3/8" FLAT WASHER
22	104468	2	SCREW 3/8"-16X2-1/2".HEX PLTD
23	107018	2	3/8"-16 HEX NUT,NYLOCK PLTD.
24	380598	1	WASHER FOR PIN ON LEVEL WIND
25	222290	1	CAP, GREASE FITTING
26	A107332	2	SCREW,SET,#10-24 X 1/4",PLATED
27	A102805-1	1	PIN, HAIRPIN, 0.243" WIRE X 5" LONG

UNLESS OTHERWISE SPECIFIED

✓=125 MICROINCHES	MACHINING TOLERANCES
BREAK ALL EDGES	FRACTIONAL ± .015
FABRICATION TOL. ± 1/16"	DECIMAL ± .010
ANGULAR ± 1°	XXX ± .005

THIS DOCUMENT IS THE PROPERTY OF HI-VAC, CORP. AND IS FURNISHED FOR AUTHORIZED USE ONLY, NEITHER THIS DOCUMENT NOR THE INFORMATION DISCLOSED HEREIN SHALL BE COPIED, REPRODUCED, TRANSFERRED OR USED FOR MANUFACTURING OR FOR ANY OTHER PURPOSE EXCEPT AS AUTHORIZED IN WRITING BY HI-VAC, CORP.

AQUATECH
A PRODUCT OF HI-VAC CORPORATION
117 INDUSTRY ROAD MARIETTA, OHIO 45750 USA
PHONE +740.374.9171 FAX +740.374.5447

REV.	DESCRIPTION	DATE	BY	NEXT ASSY.
E		.	.	
D		.	.	
C		.	.	—
B		.	.	—
A				—
				—

SCALE: NONE	WEIGHT:	DRAWN BY: CGT/RP	PRODUCT CODE: B-SERIES
DWG SIZE: B	DATE: 1/29/14	CHECKED BY:	
DESCRIPTION: LEVELWIND WITH RIGHT HAND COUNTER AND TWO HANDLES			
MATERIAL: RAW MAT'L.:	PART NUMBER: 240695-10		REV: —

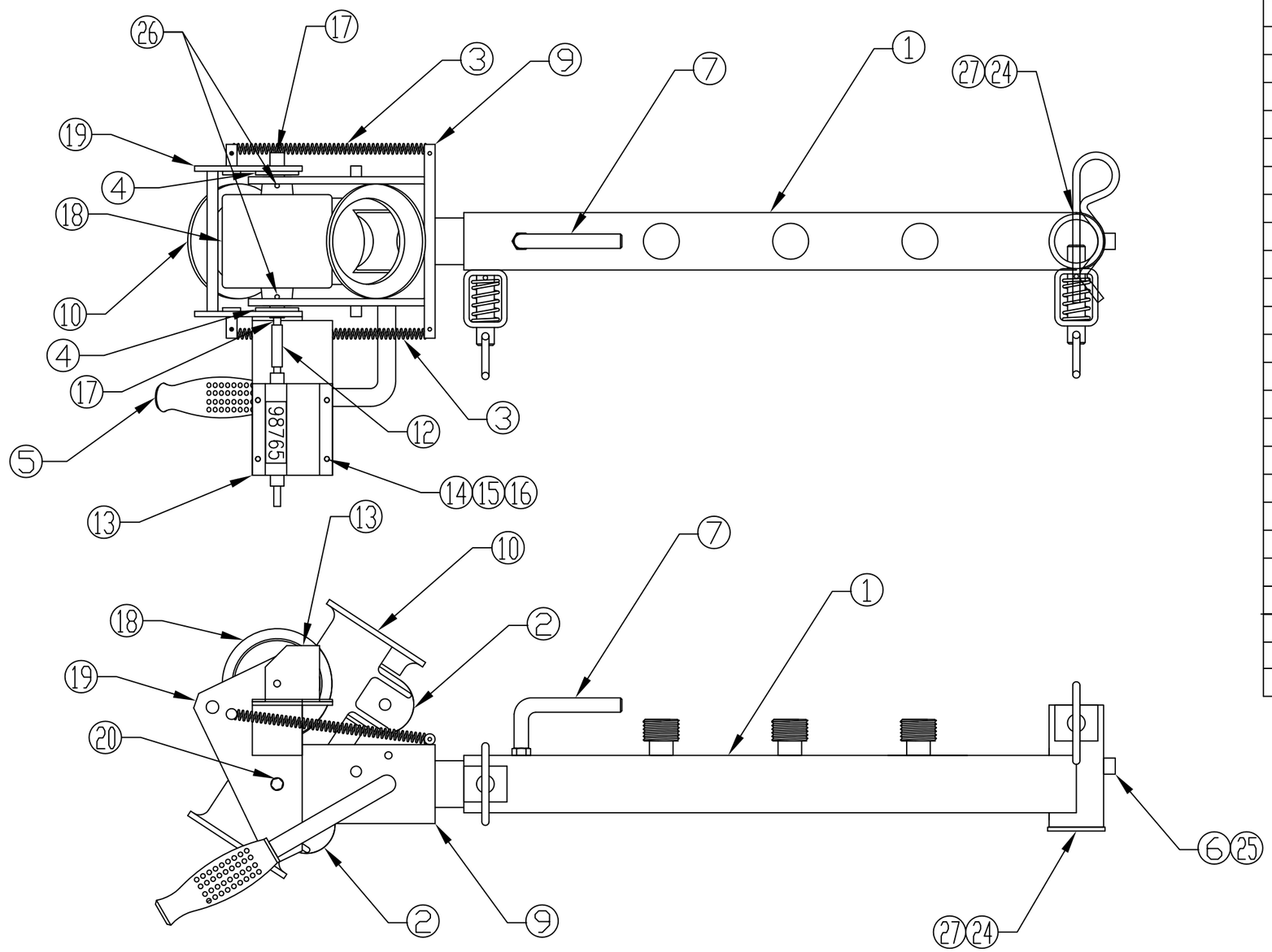

PART NO.: 240695-8		DESCRIPTION: LEVEL WIND WITH R.H. COUNTER	
ITEM	PART NO.	REQ'D.	DESCRIPTION
1	240098-2	1	SUPPORT ARM MODIFICATION
2	152630	2	ROLLER
3	220920	2	SPRING
4	107226	2	WASHER, 1/2",FLAT,PLTD,
5	220940	1	HAND GRIP
6	152040	1	GREASE NIPPLE
7	240686	1	LOCK HANDLE, LEVEL WIND
8	-	-	-
9	240871-2	1	FRAME ASS'Y- LEVEL WIND
10	222810	1	HOSE GUIDE TUBE
11	-	-	-
12	384980	1	3/16" ID PLASTIC TUBE X 2" LONG
13	220976-1	1	COUNTER
14	107004	4	NUT #6-32. HEX. PLTD.
15	103548	4	SCREW,#6-32X3/4",ROUND MACHINE
16	107286	4	WASHER,#6,LOCK,PLTD,
17	222857-1	1	SHAFT 1/2"DIA.
18	222820	1	COUNTER OPERATING ROLLER
19	242194-1	1	WELDMENT COUNTER ROLLER BRKT.
20	104418	2	SHOULDER BOLT
21	107220	6	3/8" FLAT WASHER
22	104468	2	SCREW 3/8"-16X2-1/2".HEX PLTD
23	107018	2	3/8"-16 HEX NUT,NYLOCK PLTD.
24	380598	1	WASHER FOR PIN ON LEVEL WIND
25	222290	1	CAP, GREASE FITTING
26	A107332	2	SCREW,SET,#10-24 X 1/4",PLATED
27	A102805-1	1	PIN, HAIRPIN, 0.243" WIRE X 5" LONG

UNLESS OTHERWISE SPECIFIED

✓=125 MICROINCHES	MACHINING TOLERANCES
BREAK ALL EDGES	FRACTIONAL ± .015
FABRICATION TOL. ± 1/16"	DECIMAL ± .010
ANGULAR ± 1°	XXX ± .005

THIS DOCUMENT IS THE PROPERTY OF HI-VAC, CORP. AND IS FURNISHED FOR AUTHORIZED USE ONLY, NEITHER THIS DOCUMENT NOR THE INFORMATION DISCLOSED HEREIN SHALL BE COPIED, REPRODUCED, TRANSFERRED OR USED FOR MANUFACTURING OR FOR ANY OTHER PURPOSE EXCEPT AS AUTHORIZED IN WRITING BY HI-VAC, CORP.

AQUATECH
A PRODUCT OF HI-VAC CORPORATION
117 INDUSTRY ROAD MARIETTA, OHIO 45750 USA
PHONE +740.374.9171 FAX +740.374.5447

REV.	DESCRIPTION	DATE	BY	NEXT ASSY.
E		.	.	
D		.	.	
C		.	.	–
B		.	.	–
A		.	.	–
				–

SCALE: NONE	WEIGHT:	DRAWN BY: CGT	PRODUCT CODE: B-SERIES
DWG SIZE: B	DATE: 22MAR13	CHECKED BY:	
DESCRIPTION: LEVELWIND W/ RIGHT HAND COUNTER			
MATERIAL: RAW MAT'L.:	PART NUMBER: 240695-8		REV:

PART NO.: 240695-3-METER	DESCRIPTION: LEVEL WIND W/COUNTER (METERS)		
ITEM	PART NO.	REQ'D.	DESCRIPTION
1	240098-2	1	SUPPORT ARM MODIFICATION
2	152630	2	ROLLER
3	220920	2	SPRING
4	107226	2	WASHER, 1/2",FLAT,PLTD,
5	220940	1	HAND GRIP
6	152040	1	GREASE NIPPLE
7	240686	1	LEVEL WIND HANDLE
8	-	-	-
9	240871-2	1	FRAME ASS'Y- LEVEL WIND
10	222810	1	HOSE GUIDE TUBE
11	234264-10	1	ROUND BAR 1/8"DIA. X 1"LONG
12	234265-10	1	PLASTIC TUBE 1 1/4" LONG
13	220980-METER	1	DIGITAL COUNTER MARKED FOR TENTHS
14	107004	4	NUT #6-32. HEX. PLTD.
15	103548	4	SCREW,#6-32X3/4",ROUND MACHINE
16	107286	4	WASHER,#6,LOCK,PLTD,
17	222857	1	SHAFT 1/2"DIA.
A 18	222820-METER	1	COUNTER OPERATING ROLLER
19	242194	1	WELDMENT COUNTER ROLLER BRKT.
20	104418	2	SHOULDER BOLT
21	107220	6	3/8" FLAT WASHER
22	104468	2	SCREW 3/8"-16X2-1/2".HEX PLTD
23	107018	2	3/8"-16 HEX NUT,NYLOCK PLTD.
24	380598	1	WASHER FOR PIN ON LEVEL WIND
25	-	-	-
26	-	-	-
27	-	-	-

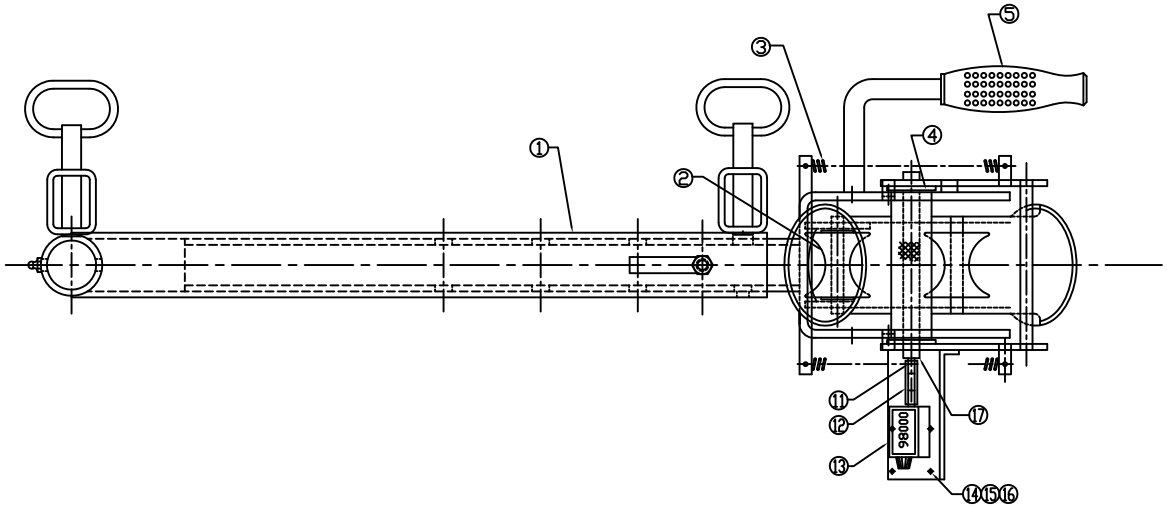

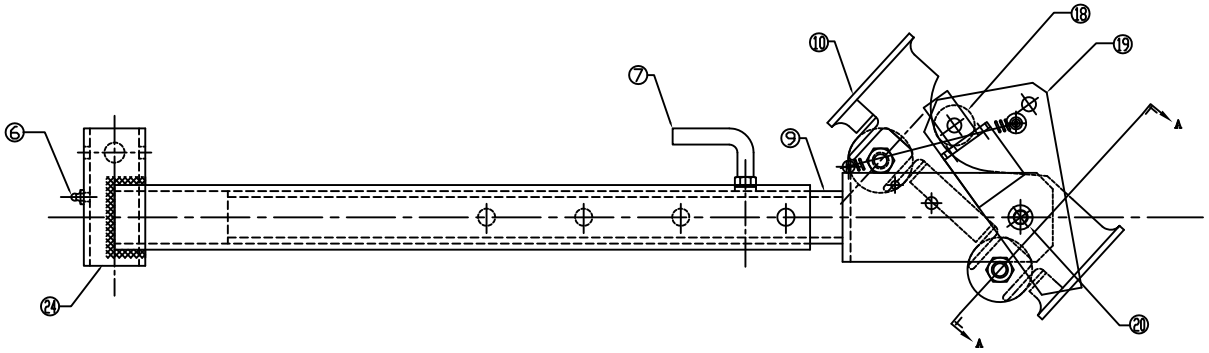

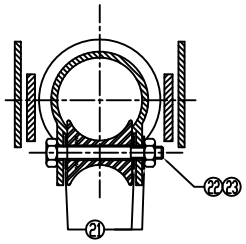

A-A SECTION

DO NOT SCALE

REV.	DESCRIPTION	DATE	BY
A	ITEM 18 WAS 222820	6/5/12	EP

NEXT ASSY.
-
-
-
-

UNLESS OTHERWISE SPECIFIED
√=125 MICROINCHES
BREAK ALL EDGES
FABRICATION TOL. ± 1/16"
ANGULAR ± 1°
MACHINING TOLERANCES
FRACTIONAL ± .015
DECIMAL ± .010
XXX ± .005

THIS DOCUMENT IS THE PROPERTY OF HI-VAC, CORP. AND IS FURNISHED FOR AUTHORIZED USE ONLY, NEITHER THIS DOCUMENT NOR THE INFORMATION DISCLOSED HEREIN SHALL BE COPIED, REPRODUCED, TRANSFERRED OR USED FOR MANUFACTURING OR FOR ANY OTHER PURPOSE EXCEPT AS AUTHORIZED IN WRITING BY HI-VAC, CORP.

AQUATECH
A PRODUCT OF HI-VAC CORPORATION
117 INDUSTRY ROAD MARIETTA, OHIO 45750 USA
PHONE +740.374.9171 FAX +740.374.5447

SCALE: 1/2" = 1" | WEIGHT: | DRAWN BY: JKG | PRODUCT CODE: B-SERIES
DWG SIZE: C | DATE: 03/23/12 | CHECKED BY:

DESCRIPTION: LEVEL WIND - W/COUNTER (METERS)

MATERIAL: SEE B.O.M. | PART NUMBER: 240695-3-METER | REV: A
RAW MAT'L.:

Page 7

PART NO.: 240695-3		DESCRIPTION: LEVEL WIND WITH COUNTER	
ITEM	PART NO.	REQ'D.	DESCRIPTION
1	240098-2	1	SUPPORT ARM ASSEMBLY
2	152630	2	ROLLER
3	220920	2	SPRING
4	107226	2	WASHER, 1/2",FLAT,PLTD,
5	220940	1	HAND GRIP
6	152040	1	GREASE NIPPLE
7	240686	1	LEVEL WIND HANDLE
8	–	–	–
9	240871-2	1	FRAME ASS'Y- LEVEL WIND
10	222810	1	HOSE GUIDE TUBE
11	234264-10	1	ROUND BAR 1/8"DIA. X 1"LONG
12	234265-10	1	PLASTIC TUBE 1 1/4" LONG
13	220980	1	COUNTER
14	107004	4	NUT #6-32. HEX. PLTD.
15	103548	4	SCREW,#6-32X3/4",ROUND MACHINE
16	107286	4	WASHER,#6,LOCK,PLTD,
17	222857	1	SHAFT 1/2"DIA.
18	222820	1	COUNTER OPERATING ROLLER
19	242194	1	WELDMENT COUNTER ROLLER BRKT.
20	104418	2	SHOULDER BOLT
21	107220	6	3/8" FLAT WASHER
22	104468	2	SCREW 3/8"-16X2-1/2".HEX PLTD
23	107018	2	3/8"-16 HEX NUT,NYLOCK PLTD.
24	380598	1	WASHER FOR PIN ON LEVEL WIND
25	–	–	–
26	–	–	–
27	–	–	–

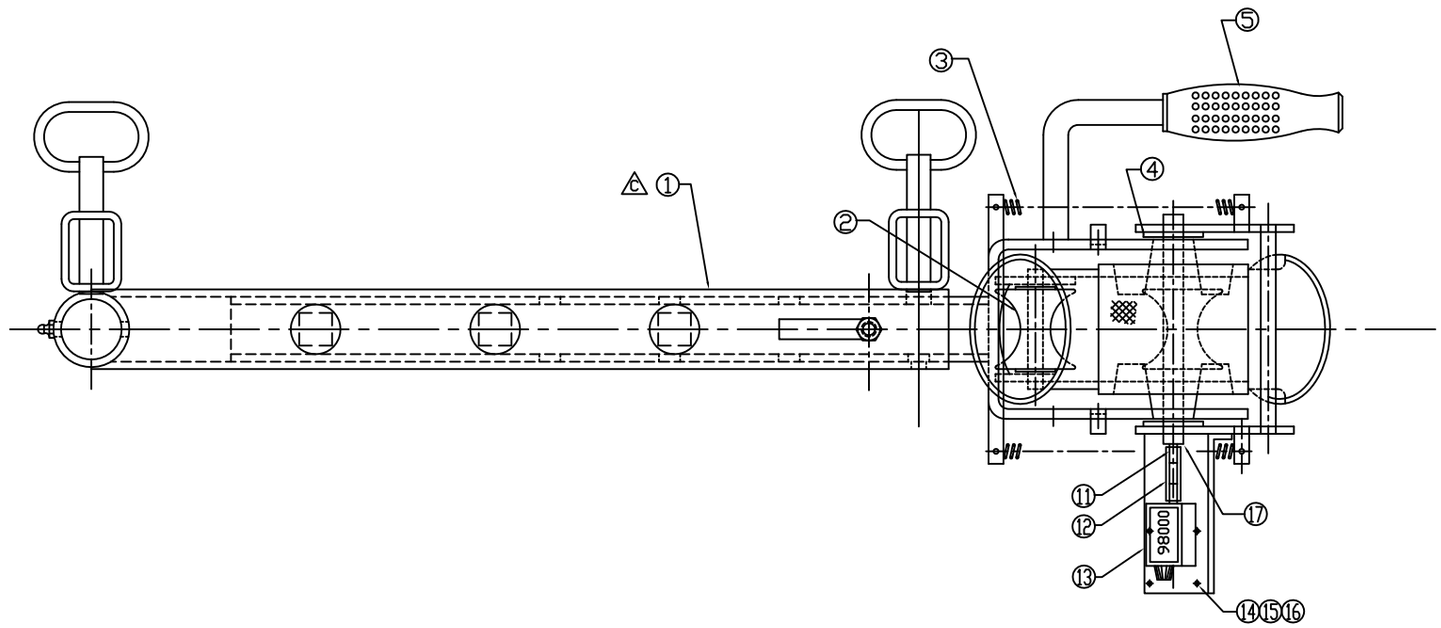

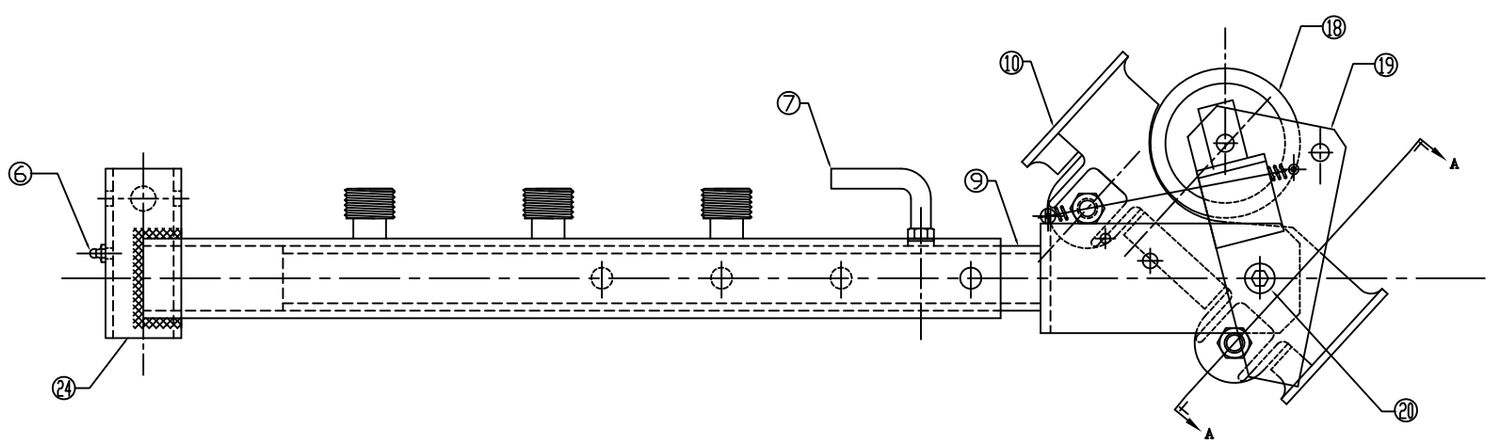

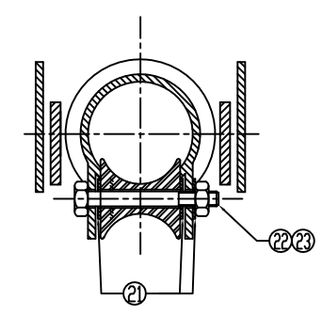

A-A SECTION

DO NOT SCALE

REV.	DESCRIPTION	DATE	BY	NEXT ASSY.
				–
Ⓓ				–
Ⓒ	UPDATED TO SHOW ITEM 1 CORRECTLY	12/4/13	MLH	–
Ⓑ	SECTION VIEW WAS LABLED INCCORECT	5/15/08	KRS	–
Ⓐ	CHG. PART NO# ON ITEM 1 AND ITEM 9	06/28/07	KRS	

UNLESS OTHERWISE SPECIFIED
✓=125 MICROINCHES
BREAK ALL EDGES
FABRICATION TOL. ± 1/16"
ANGULAR ± 1°

MACHINING TOLERANCES
FRACTIONAL ± .015
DECIMAL ± .010
XXX ± .005

THIS DOCUMENT IS THE PROPERTY OF HI-VAC, CORP. AND IS FURNISHED FOR AUTHORIZED USE ONLY, NEITHER THIS DOCUMENT NOR THE INFORMATION DISCLOSED HEREIN SHALL BE COPIED, REPRODUCED, TRANSFERRED OR USED FOR MANUFACTURING OR FOR ANY OTHER PURPOSE EXCEPT AS AUTHORIZED IN WRITING BY HI-VAC, CORP.

AQUATECH
A PRODUCT OF HI-VAC CORPORATION
117 INDUSTRY ROAD MARIETTA, OHIO 45750 USA
PHONE +740.374.9171 FAX +740.374.5447

SCALE: 1/2" = 1"	WEIGHT:	DRAWN BY: RAE	PRODUCT CODE:
DWG SIZE: C	DATE: 03/14/07	CHECKED BY:	B-SERIES

DESCRIPTION: LEVEL WIND – WITH HANDLE

MATERIAL: SEE B.O.M.
RAW MAT'L.:

PART NUMBER: 240695-3
REV: C

PART NO.: 240496-2		DESCRIPTION: LEVEL WIND W/O COUNTER	
ITEM	PART NO.	REQ'D.	DESCRIPTION
1	152040	1	GREASE NIPPLE
2	240098-2	1	SUPPORT ARM ASSEMBLY
3	240686	1	LEVEL WIND HANDLE
4			
5	239957-1	1	TELESCOPIC ARM ASSEMBLY
6	220940	1	HAND GRIP
7	239968	1	ROLLERY ASSEMBLY
8	380598	1	WASHER FOR PIN

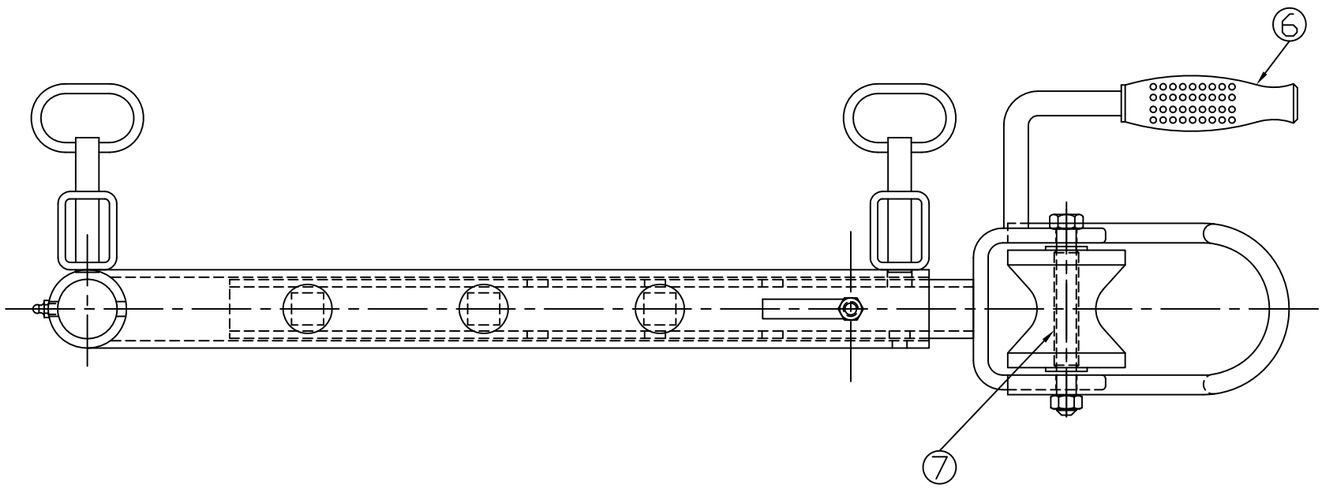

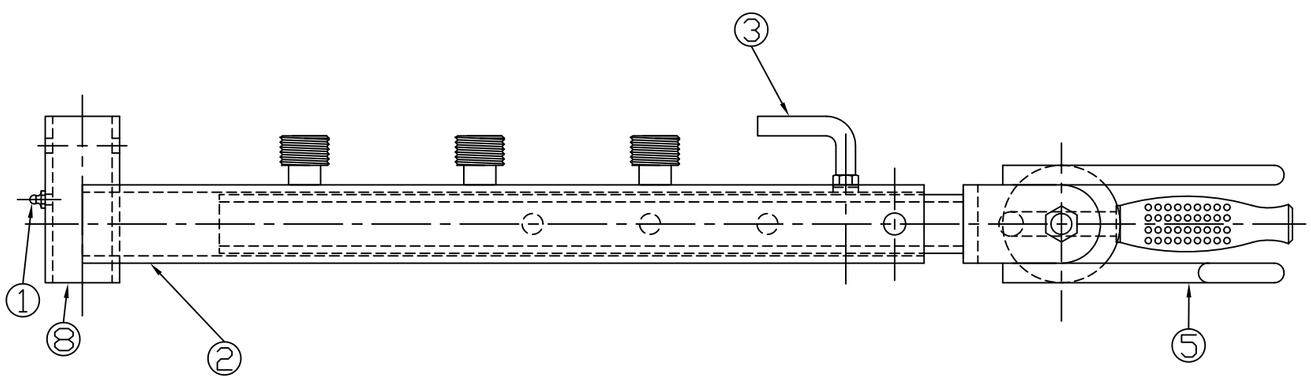

DO NOT SCALE

REV.	DESCRIPTION	DATE	BY	NEXT ASSY.
E				–
D				–
C				–
B	ADDED PIPE PLUGS TO VIEWS	10/11/13	MLH	–
A	ADDED AND REVISED ITEM 7	5/15/12	SZF	

UNLESS OTHERWISE SPECIFIED

√ =125 MICROINCHES
BREAK ALL EDGES
FABRICATION TOL. ± 1/16"
ANGULAR ± 1°

MACHINING TOLERANCES
FRACTIONAL ± .015
DECIMAL ± .010
XXX ± .005

THIS DOCUMENT IS THE PROPERTY OF HI-VAC, CORP. AND IS FURNISHED FOR AUTHORIZED USE ONLY, NEITHER THIS DOCUMENT NOR THE INFORMATION DISCLOSED HEREIN SHALL BE COPIED, REPRODUCED, TRANSFERRED OR USED FOR MANUFACTURING OR FOR ANY OTHER PURPOSE EXCEPT AS AUTHORIZED IN WRITING BY HI-VAC, CORP.

AQUATECH
A PRODUCT OF HI-VAC CORPORATION
117 INDUSTRY ROAD MARIETTA, OHIO 45750 USA
PHONE +740.374.9171 FAX +740.374.5447

SCALE: 1/4" = 1"	WEIGHT:	DRAWN BY: RAE	PRODUCT CODE: B-SERIES
DWG SIZE: B	DATE: 06/05/07	CHECKED BY:	

DESCRIPTION: LEVEL WIND – WITHOUT COUNTER

MATERIAL: SEE BILL OF MATERIALS	PART NUMBER: 240496-2	REV: B
RAW MAT'L.:		

PART NO.: 240496-3		DESCRIPTION: LEVEL WIND W/O COUNTER	
ITEM	PART NO.	REQ'D.	DESCRIPTION
1	152040	1	GREASE NIPPLE
2	240098-3	1	SUPPORT ARM ASSEMBLY
3	240686	1	LEVEL WIND HANDLE
4			
5	239957-1	1	TELESCOPIC ARM ASSEMBLY
6	220940	1	HAND GRIP
7	239968	1	ROLLER ASSEMBLY
8	380598	1	WASHER FOR PIN

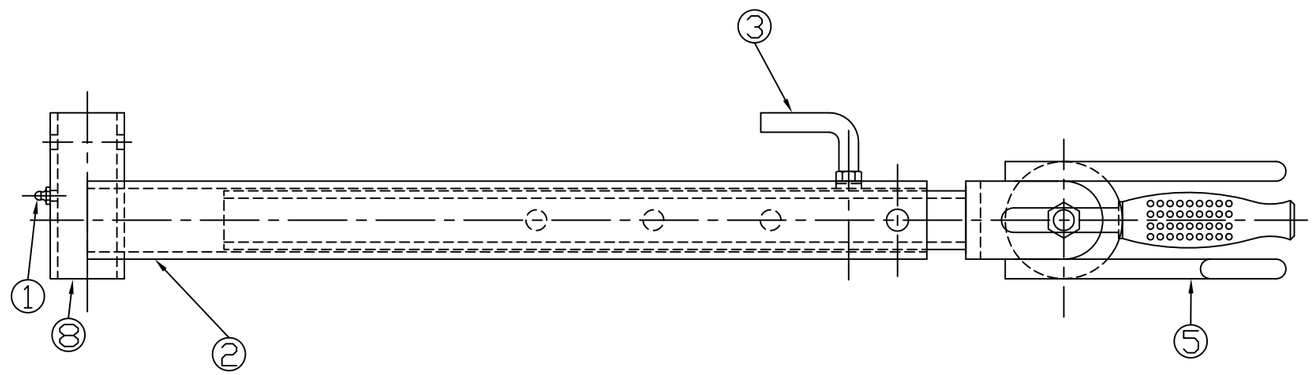

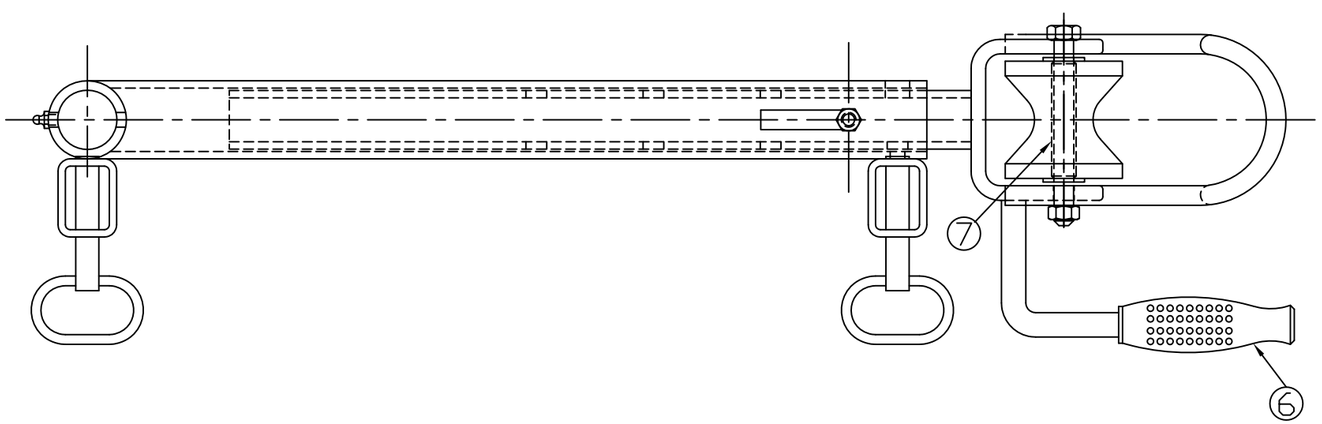

DO NOT SCALE

REV.	DESCRIPTION	DATE	BY	NEXT ASSY.
E				–
D				–
C				–
B				–
A	ADDED AND REVISED ITEM 7	5/15/12	SZF	

UNLESS OTHERWISE SPECIFIED

√ =125 MICROINCHES
BREAK ALL EDGES
FABRICATION TOL. ± 1/16"
ANGULAR ± 1°

MACHINING TOLERANCES
FRACTIONAL ± .015
DECIMAL ± .010
XXX ± .005

THIS DOCUMENT IS THE PROPERTY OF HI-VAC, CORP. AND IS FURNISHED FOR AUTHORIZED USE ONLY, NEITHER THIS DOCUMENT NOR THE INFORMATION DISCLOSED HEREIN SHALL BE COPIED, REPRODUCED, TRANSFERRED OR USED FOR MANUFACTURING OR FOR ANY OTHER PURPOSE EXCEPT AS AUTHORIZED IN WRITING BY HI-VAC, CORP.

AQUATECH
A PRODUCT OF HI-VAC CORPORATION
117 INDUSTRY ROAD MARIETTA, OHIO 45750 USA
PHONE +740.374.9171 FAX +740.374.5447

SCALE: 1/4" = 1"	WEIGHT:	DRAWN BY: RAE	PRODUCT CODE:
DWG SIZE: B	DATE: 01/02/08	CHECKED BY:	B-SERIES

DESCRIPTION: LEVEL WIND – W/O COUNTER, LH

MATERIAL: SEE BILL OF MATERIALS	PART NUMBER: 240496-3	REV: A
RAW MAT'L.:		

PART NO.: 240496-8		DESCRIPTION: LEVEL WIND W/O COUNTER	
ITEM	PART NO.	REQ'D.	DESCRIPTION
1	152040	1	GREASE NIPPLE
2	240098-2	1	SUPPORT ARM ASSEMBLY
3	240686	1	LEVEL WIND HANDLE
4			
5	239957-6	1	TELESCOPIC ARM ASSEMBLY
6	220940	1	HAND GRIP
7	239968	1	ROLLERY ASSEMBLY
8	380598	1	WASHER FOR PIN

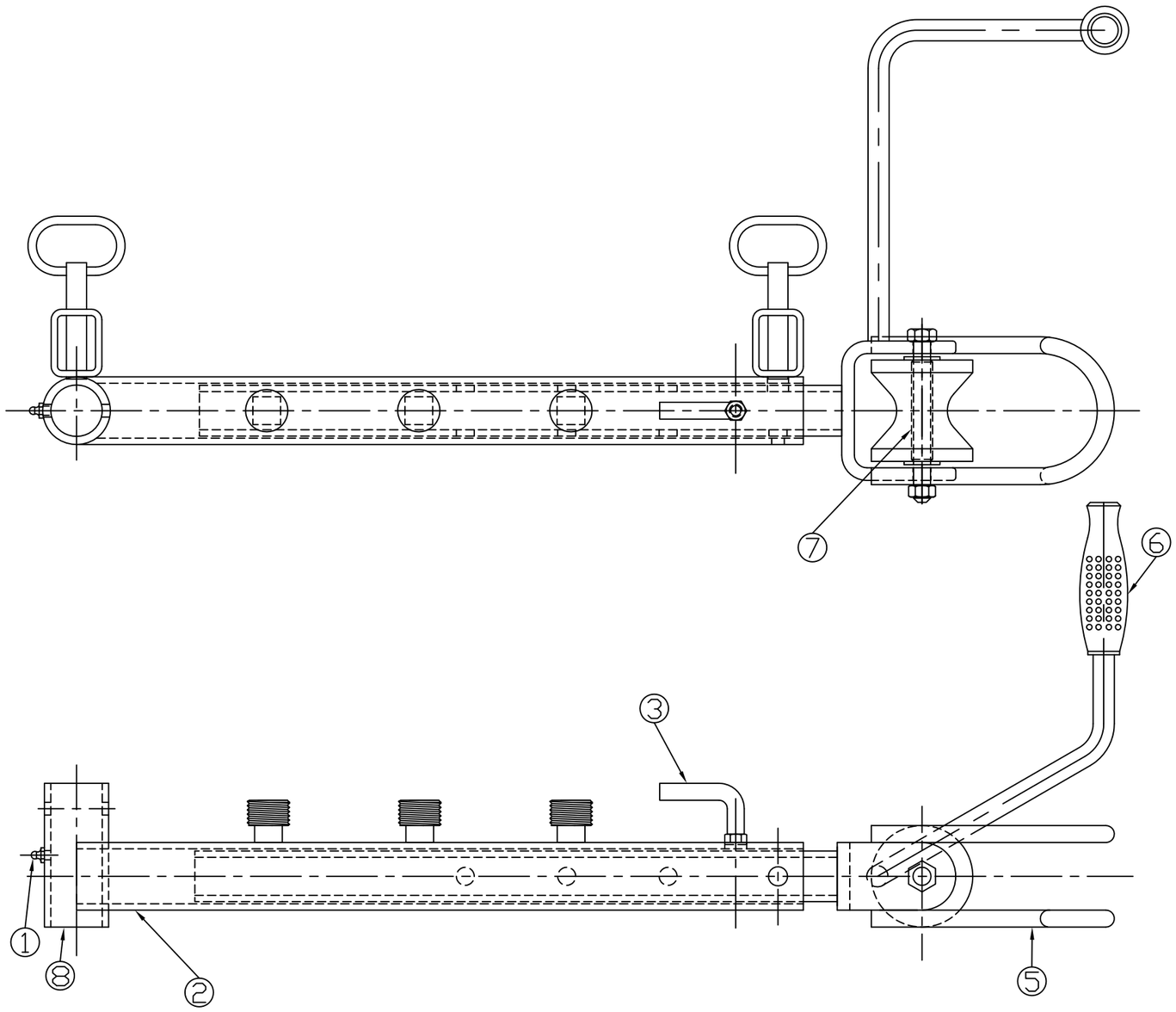

DO NOT SCALE

NEXT ASSY.
–
–
–
–

AQUATECH
A PRODUCT OF HI-VAC CORPORATION
117 INDUSTRY ROAD MARIETTA, OHIO 45750 USA
PHONE +740.374.9171 FAX +740.374.5447

REV.	DESCRIPTION	DATE	BY
B			
A			

SCALE: 1/4" = 1"	WEIGHT:	DRAWN BY: RP	PRODUCT CODE: B-SERIES
DWG SIZE: B	DATE: 2/10/14	CHECKED BY:	

DESCRIPTION: EXTENDED HANDLE LEVEL WIND – WITHOUT COUNTER

MATERIAL:

RAW MAT'L.:

PART NUMBER: 240496-8

REV: –

UNLESS OTHERWISE SPECIFIED

✓ =125 MICROINCHES
BREAK ALL EDGES
FABRICATION TOL. ± 1/16"
ANGULAR ± 1°

MACHINING TOLERANCES
FRACTIONAL ± .015
DECIMAL ± .010
XXX ± .005

THIS DOCUMENT IS THE PROPERTY OF HI-VAC, CORP. AND IS FURNISHED FOR AUTHORIZED USE ONLY, NEITHER THIS DOCUMENT NOR THE INFORMATION DISCLOSED HEREIN SHALL BE COPIED, REPRODUCED, TRANSFERRED OR USED FOR MANUFACTURING OR FOR ANY OTHER PURPOSE EXCEPT AS AUTHORIZED IN WRITING BY HI-VAC, CORP.

B-SERIES CLAM SHELL TYPE LEVEL WINDS

For newer units equipped for spring latch pin type level winds.

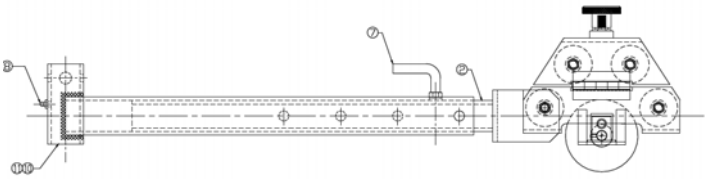	A240695-5 with Counter (OBSOLETE) Head Only: A381953-1 Used on A28101004
	A240695-6 with Counter for Rear Reel Head Only: A381953-2 Use on 29101010, 28101124, 20001045, 20111018, 20111019, 20111044, 20121022 and 20131128
	A240695-9 w/o Counter for Rear Reel Head Only: A381953-3 Used on 20131122
	A246970-4 with Counter for Front Reel Head Only: A381953-2 Used on A2001079

PART NO.: 240695-9		DESCRIPTION: CLAM SHELL LEVEL WIND	
ITEM	PART NO.	REQ'D.	DESCRIPTION
1	240098-2	1	SUPPORT ARM ASSEMBLY
2	381953-3	1	CLAM SHELL HOUSING
3	240871	1	FRAME ASS'Y- LEVEL WIND
4	380598	1	WASHER FOR PIN ON LEVEL WIND
5	220940	1	HAND GRIP
6	152040	1	GREASE NIPPLE
7	240686	1	LEVEL WIND HANDLE

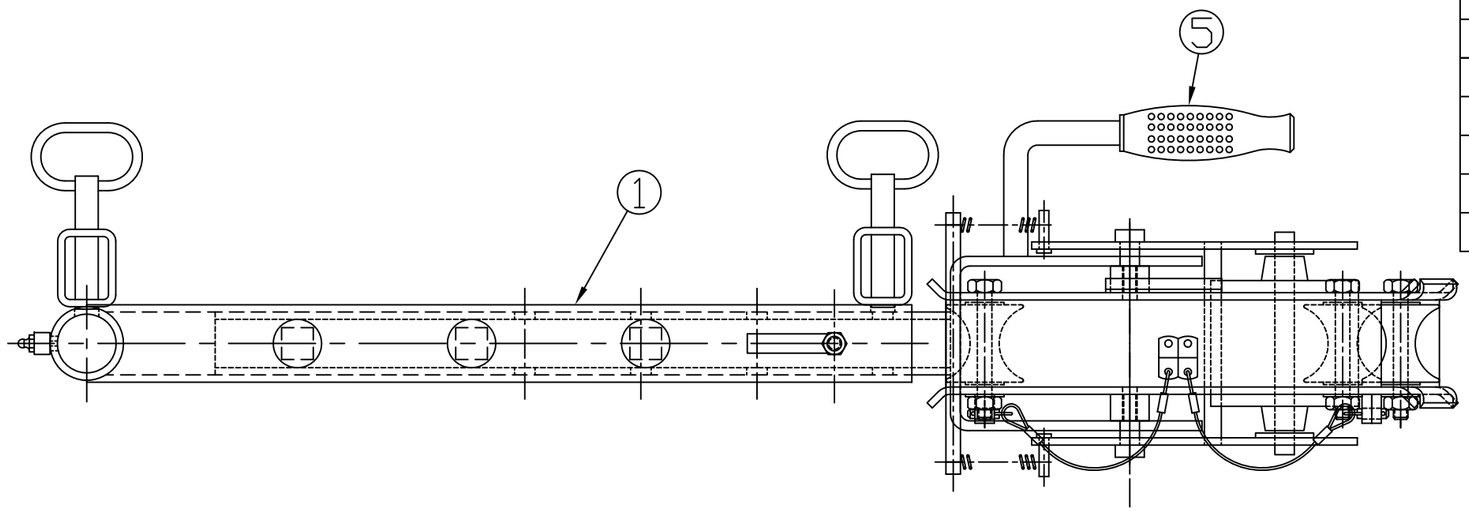

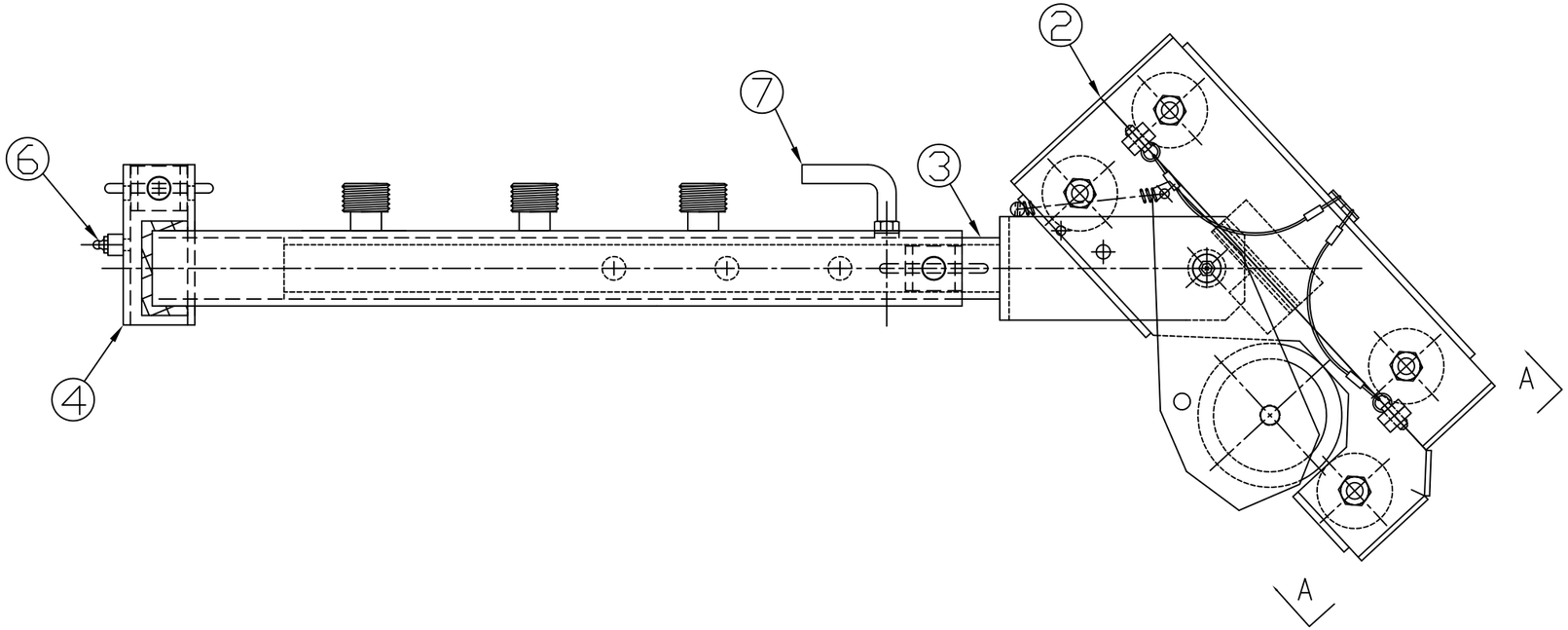

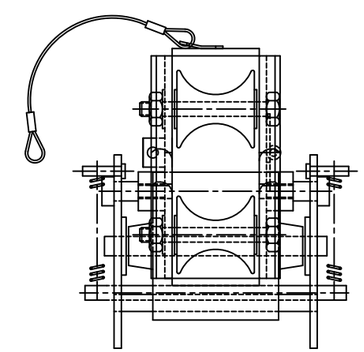

VIEW "A-A"

DO NOT SCALE

NEXT ASSY.
–
–
–
–

REV.	DESCRIPTION	DATE	BY
○			
Ⓐ			

UNLESS OTHERWISE SPECIFIED

✓=125 MICROINCHES
BREAK ALL EDGES
FABRICATION TOL. ± 1/16"
ANGULAR ± 1°

MACHINING TOLERANCES
FRACTIONAL ± .015
DECIMAL ± .010
XXX ± .005

THIS DOCUMENT IS THE PROPERTY OF HI-VAC, CORP. AND IS FURNISHED FOR AUTHORIZED USE ONLY, NEITHER THIS DOCUMENT NOR THE INFORMATION DISCLOSED HEREIN SHALL BE COPIED, REPRODUCED, TRANSFERRED OR USED FOR MANUFACTURING OR FOR ANY OTHER PURPOSE EXCEPT AS AUTHORIZED IN WRITING BY HI-VAC, CORP.

AQUATECH
A PRODUCT OF HI-VAC CORPORATION
117 INDUSTRY ROAD MARIETTA, OHIO 45750 USA
PHONE +740.374.9171 FAX +740.374.5447

SCALE: NTS	WEIGHT:	DRAWN BY: RP	PRODUCT CODE:
DWG SIZE: B	DATE: 11/18/13	CHECKED BY:	B-SERIES

DESCRIPTION: CLAM SHELL LEVEL WIND W/O COUNTER FOR REAR REEL

MATERIAL:	PART NUMBER:	REV:
RAW MAT'L.:	240695-9	–

PART NO.: 240695-6		DESCRIPTION: CLAM SHELL LEVEL WIND	
ITEM	PART NO.	REQ'D.	DESCRIPTION
1	240098-2	1	SUPPORT ARM ASSEMBLY
2	381953-2	1	CLAM SHELL COUNTER ASSY
3	240871	1	FRAME ASS'Y- LEVEL WIND
4	380598	1	WASHER FOR PIN ON LEVEL WIND
5	220940	1	HAND GRIP
6	152040	1	GREASE NIPPLE
7	240686	1	LEVEL WIND HANDLE

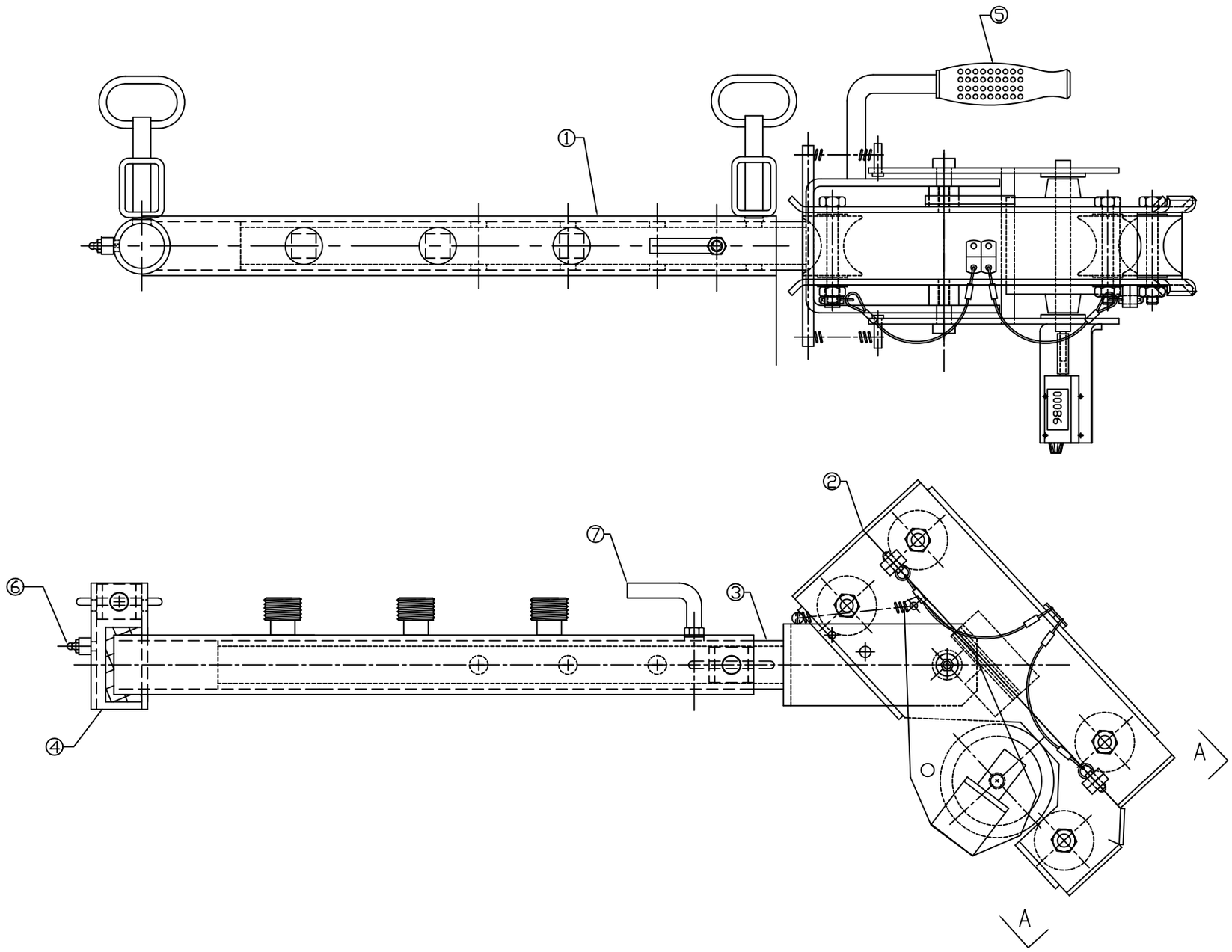

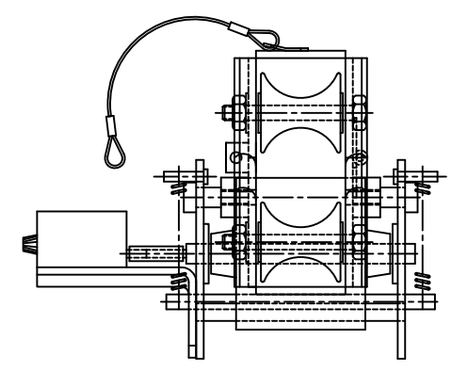

A-A SECTION

DO NOT SCALE

				NEXT ASSY.
				–
				–
Ⓒ				–
Ⓑ				–
Ⓐ	ITEM 1 WAS 240098, DEL ITEM 8	9/19/11	EP	
REV.	DESCRIPTION	DATE	BY	

UNLESS OTHERWISE SPECIFIED
✓ =125 MICROINCHES
BREAK ALL EDGES
FABRICATION TOL. ± 1/16"
ANGULAR ± 1°
MACHINING TOLERANCES
FRACTIONAL ± .015
DECIMAL ± .010
XXX ± .005

THIS DOCUMENT IS THE PROPERTY OF HI-VAC, CORP. AND IS FURNISHED FOR AUTHORIZED USE ONLY, NEITHER THIS DOCUMENT NOR THE INFORMATION DISCLOSED HEREIN SHALL BE COPIED, REPRODUCED, TRANSFERRED OR USED FOR MANUFACTURING OR FOR ANY OTHER PURPOSE EXCEPT AS AUTHORIZED IN WRITING BY HI-VAC, CORP.

AQUATECH
A PRODUCT OF HI-VAC CORPORATION
117 INDUSTRY ROAD MARIETTA, OHIO 45750 USA
PHONE +740.374.9171 FAX +740.374.5447

SCALE: 1/2" = 1"	WEIGHT:	DRAWN BY: RLF	PRODUCT CODE: B-SERIES
DWG SIZE: C	DATE: 3-31-09	CHECKED BY:	

DESCRIPTION: CLAM SHELL LEVEL WIND – W/COUNTER

MATERIAL: SEE B.O.M.
RAW MAT'L.:
PART NUMBER: 240695-6
REV: A

B-SERIES
PARTS COUNTERMAN'S CATALOG

Front Reel Level Winds
Sub-Section

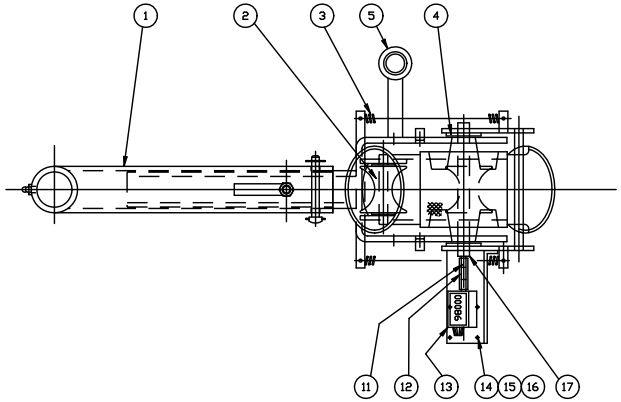

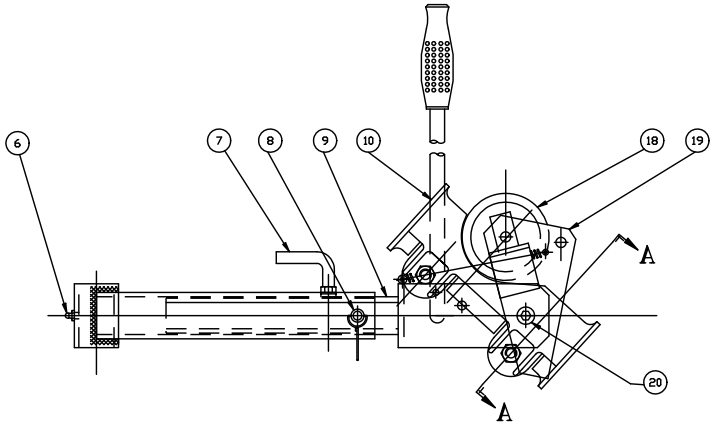

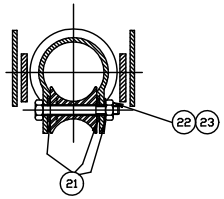

A–A SECTION

PART NO.: 246970–1		DESCRIPTION: LEVEL WIND W/ COUNTER (FRONT REEL)	
ITEM	PART NO.	REQ'D.	DESCRIPTION
1	244629–1	1	SUPPORT ARM ASSEMBLY (FRONT REEL)
2	152630	2	ROLLER
3	220920	2	SPRING
4	107226	2	WASHER, 1/2", FLAT, PLATED
5	220940	1	HAND GRIP
6	152040	1	GREASE NIPPLE
7	240686	1	LEVEL WIND HANDLE
A 8	107484	1	SAFETY PIN
9	246971–1	1	FRAME ASSEMBLY, LEVEL WIND
10	222810	1	HOSE GUIDE TUBE
11	234264–10	1	ROUND BAR, 1/8" DIA. X 1" LG.
12	234265–10	1	PLASTIC TUBE 1–1/4" LG.
13	220980	1	COUNTER
14	107004	4	NUT, #6–32, HEX, PLATED
15	103548	4	SCREW, #6–32 X 3/4", ROUND MACHINE
16	107286	4	WASHER, #6, LOCK, PLATED
17	222857	1	SHAFT, 1/2" DIA.
18	222820	1	COUNTER OPERATING ROLLER
19	242194	1	COUNTER ROLLER BRACKET WELDMENT
20	104418	2	SHOULDER BOLT
21	107220	6	3/8" FLAT WASHER
22	104468	2	SCREW, 3/8"–16 X 2–1/2", HEX, PLATED
23	107018	2	NUT, 3/8"–16 HEX, NYLOCK, PLATED

PLOT SCALE: 1=4 (B)

THIS DOCUMENT IS THE PROPERTY OF AQUATECH, INC. AND IS FURNISHED FOR AUTHORIZED USE ONLY, NEITHER THIS DOCUMENT NOR THE INFORMATION DISCLOSED HEREIN SHALL BE COPIED, REPRODUCED, TRANSFERRED OR USED FOR MANUFACTURING OR FOR ANY OTHER PURPOSE EXCEPT AS AUTHORIZED IN WRITING BY AQUATECH, INC.

NEXT ASSY.
–

AQUATECH
2026 SUMMIT COMMERCE PK.
TWINSBURG, OHIO 44087

SCALE: 1/4"=1"	DRAWN BY: JMS	WEIGHT: –	PRODUCT CODE: B–OPTION
DATE: 1/25/99	CHECKED BY: JM	BURN TEMP.: –	

DESCRIPTION: LEVEL WIND ASS'Y W/ COUNTER (FRONT REEL)

UNLESS OTHERWISE SPECIFIED
✓=125 MICROINCHES
BREAK ALL EDGES
FABRICATION TOL. ± 1/8"
ANGULAR ± 1°
MACHINING TOLERANCES
FRACTIONAL ± .015
DECIMAL ± .010
XXX ± .005

MATERIAL: SEE B/M
RAW MAT'L.: –

PART NUMBER: 246970–1 SHEET (1) OF (1) REV.: A

REV.	DESCRIPTION	DATE	BY
A	REVISE ITEM 8	06/21/05	LAG

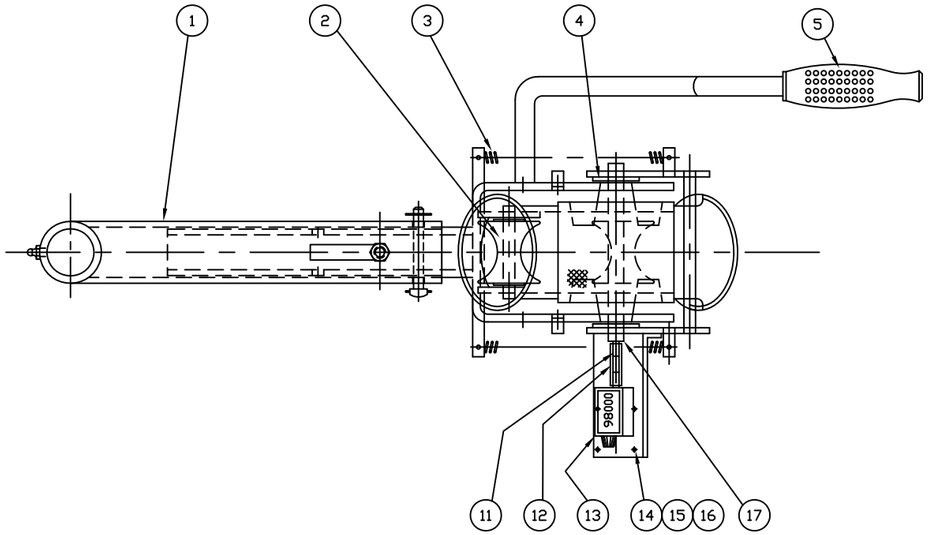

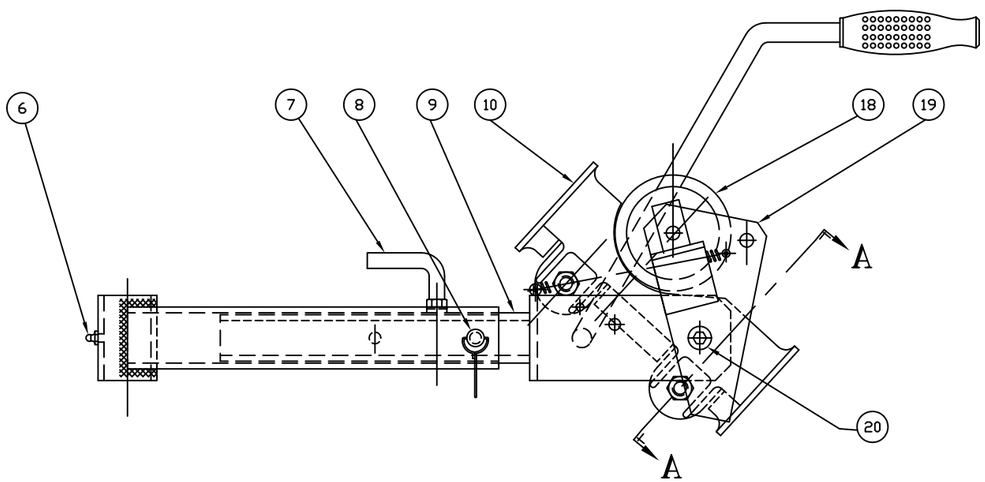

PART NO.: 246970–2		DESCRIPTION: LEVEL WIND W/ COUNTER (FRONT REEL)	
ITEM	PART NO.	REQ'D.	DESCRIPTION
1	244629–1	1	SUPPORT ARM ASSEMBLY (FRONT REEL)
2	152630	2	ROLLER
3	220920	2	SPRING
4	107226	2	WASHER, 1/2", FLAT, PLATED
5	220940	1	HAND GRIP
6	152040	1	GREASE NIPPLE
7	240686	1	LEVEL WIND HANDLE
8	A107484	1	SAFETY PIN, SQUARED RETAINER
9	246971–2	1	FRAME ASSEMBLY, LEVEL WIND
10	222810	1	HOSE GUIDE TUBE
11	234264–10	1	ROUND BAR, 1/8" DIA. X 1" LG.
12	234265–10	1	PLASTIC TUBE 1–1/4" LG.
13	220980	1	COUNTER
14	107004	4	NUT, #6–32, HEX, PLATED
15	103548	4	SCREW, #6–32 X 3/4", ROUND MACHINE
16	107286	4	WASHER, #6, LOCK, PLATED
17	222857	1	SHAFT, 1/2" DIA.
18	222820	1	COUNTER OPERATING ROLLER
19	242194	1	COUNTER ROLLER BRACKET WELDMENT
20	104418	2	SHOULDER BOLT
21	107220	6	3/8" FLAT WASHER
22	104468	2	SCREW, 3/8"–16 X 2–1/2", HEX, PLATED
23	107018	2	NUT, 3/8"–16 HEX, NYLOCK, PLATED

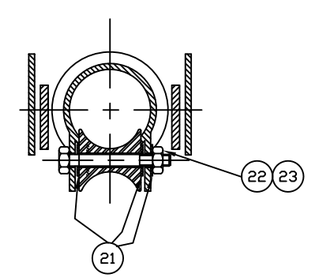

A–A SECTION

DO NOT SCALE

NEXT ASSY.
–
–
–
–

AQUATECH
A PRODUCT OF HI–VAC CORPORATION
117 INDUSTRY ROAD MARIETTA, OHIO 45750 USA
PHONE +740.374.9171 FAX +740.374.5447

REV.	DESCRIPTION	DATE	BY
Ⓐ			
◯			

SCALE:	WEIGHT:	DRAWN BY: LAG	PRODUCT CODE:
DWG SIZE: B	DATE: 06/20/05	CHECKED BY:	B–OPTION

DESCRIPTION: LEVEL WIND ASS'Y W/COUNTER (FRONT REEL)

MATERIAL: SEE B.O.M.
RAW MAT'L.:
PART NUMBER: 246970–2
REV: –

UNLESS OTHERWISE SPECIFIED
√=125 MICROINCHES
BREAK ALL EDGES
FABRICATION TOL. ± 1/16"
ANGULAR ± 1°
MACHINING TOLERANCES
FRACTIONAL ± .015
DECIMAL ± .010
XXX ± .005

THIS DOCUMENT IS THE PROPERTY OF HI–VAC, CORP. AND IS FURNISHED FOR AUTHORIZED USE ONLY, NEITHER THIS DOCUMENT NOR THE INFORMATION DISCLOSED HEREIN SHALL BE COPIED, REPRODUCED, TRANSFERRED OR USED FOR MANUFACTURING OR FOR ANY OTHER PURPOSE EXCEPT AS AUTHORIZED IN WRITING BY HI–VAC, CORP.

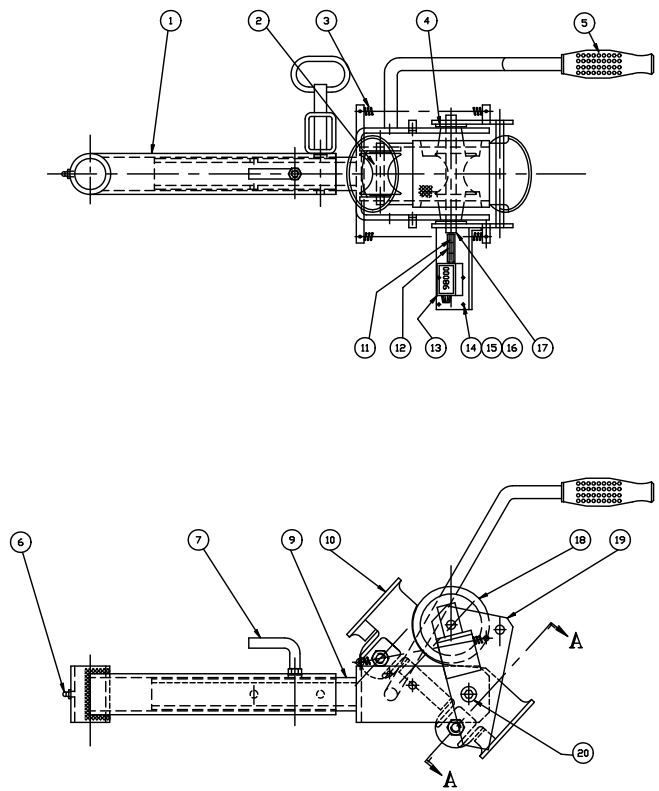

PART NO.: 246970-3		DESCRIPTION: LEVEL WIND W/ COUNTER (FRONT REEL)	
ITEM	PART NO.	REQ'D.	DESCRIPTION
1	244629-1M	1	SUPPORT ARM ASSEMBLY (FRONT REEL)
2	152630	2	ROLLER
3	220920	2	SPRING
4	107226	2	WASHER, 1/2", FLAT, PLATED
5	220940	1	HAND GRIP
6	152040	1	GREASE NIPPLE
7	240686	1	LEVEL WIND HANDLE
8			
9	246971-2M	1	FRAME ASSEMBLY, LEVEL WIND
10	222810	1	HOSE GUIDE TUBE
11	234264-10	1	ROUND BAR, 1/8" DIA. X 1" LG.
12	234265-10	1	PLASTIC TUBE 1-1/4" LG.
13	220980	1	COUNTER
14	107004	4	NUT, #6-32, HEX, PLATED
15	103548	4	SCREW, #6-32 X 3/4", ROUND MACHINE
16	107286	4	WASHER, #6, LOCK, PLATED
17	222857	1	SHAFT, 1/2" DIA.
18	222820	1	COUNTER OPERATING ROLLER
19	242194	1	COUNTER ROLLER BRACKET WELDMENT
20	104418	2	SHOULDER BOLT
21	BIN	6	3/8" FLAT WASHER
22	104468	2	SCREW, 3/8"-16 X 2-1/2", HEX, PLATED
23	107018	2	NUT, 3/8"-16 HEX, NYLOCK, PLATED

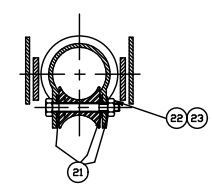

A-A SECTION

DO NOT SCALE

NEXT ASSY.
–
–
–
–

AQUATECH
A PRODUCT OF HI-VAC CORPORATION
117 INDUSTRY ROAD MARIETTA, OHIO 45750 USA
PHONE +740.374.9171 FAX +740.374.5447

REV.	DESCRIPTION	DATE	BY
○			
Ⓐ			

SCALE:	WEIGHT:	DRAWN BY: RAE	PRODUCT CODE:
DWG SIZE: B	DATE: 05/02/07	CHECKED BY:	B-OPTION

DESCRIPTION: LEVEL WIND ASS'Y W/COUNTER (FRONT REEL)

UNLESS OTHERWISE SPECIFIED
√=125 MICROINCHES
BREAK ALL EDGES
FABRICATION TOL. ± 1/16"
ANGULAR ± 1°
MACHINING TOLERANCES
FRACTIONAL ± .015
DECIMAL ± .010
XXX ± .005

THIS DOCUMENT IS THE PROPERTY OF HI-VAC, CORP. AND IS FURNISHED FOR AUTHORIZED USE ONLY, NEITHER THIS DOCUMENT NOR THE INFORMATION DISCLOSED HEREIN SHALL BE COPIED, REPRODUCED, TRANSFERRED OR USED FOR MANUFACTURING OR FOR ANY OTHER PURPOSE EXCEPT AS AUTHORIZED IN WRITING BY HI-VAC, CORP.

MATERIAL: SEE B.O.M.	PART NUMBER: 246970-3	REV: –
RAW MAT'L.:		

PART NO.: 246970-4		DESCRIPTION: LEVEL WIND,CLAM SHEEL W/COUNTER	
ITEM	PART NO.	REQ'D.	DESCRIPTION
1	244629-1M	1	SUPPORT ARM ASSEMBLY (FRONT REEL)
2	381953-2	1	CLAM SHELL COUNTER ASSY
3	246971-2M	1	FRAME ASSEMBLY, LEVEL WIND
4	220940	1	HAND GRIP
5	152040	1	GREASE NIPPLE
6	240686	1	LEVEL WIND HANDLE
7			
8			
9			

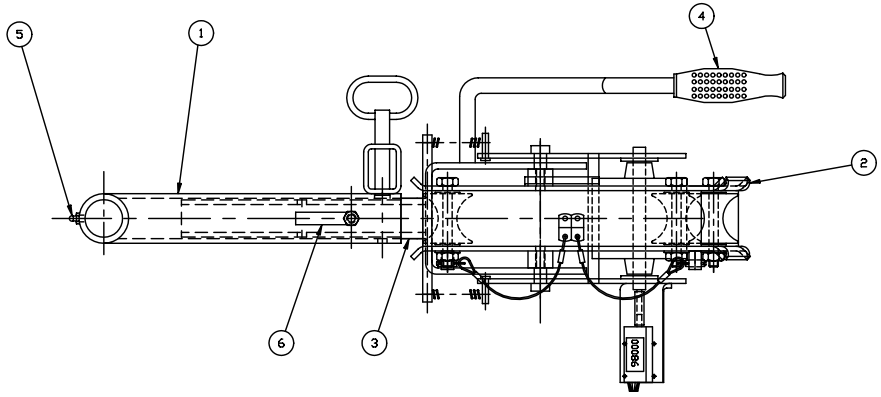

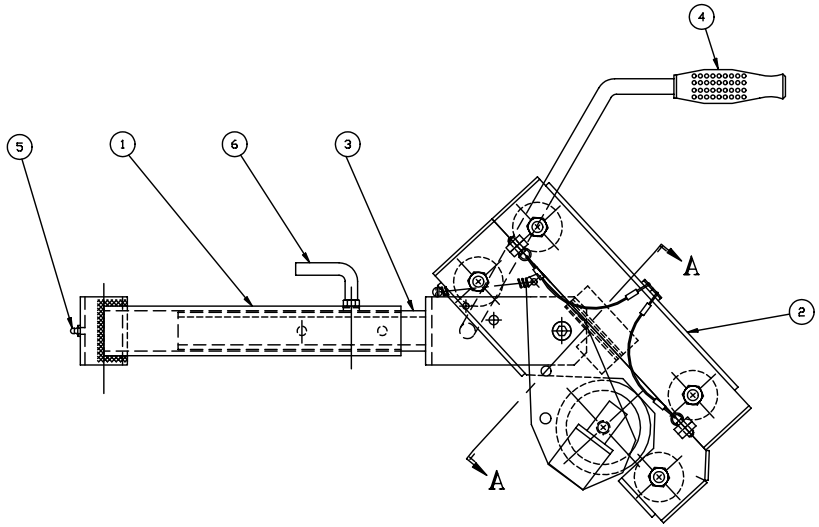

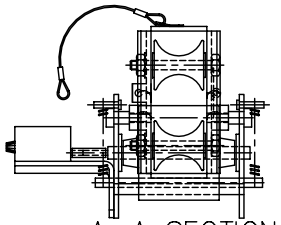

A–A SECTION

DO NOT SCALE

REV.	DESCRIPTION	DATE	BY
◯			
Ⓐ			

NEXT ASSY.
–
–
–
–

UNLESS OTHERWISE SPECIFIED
√=125 MICROINCHES
BREAK ALL EDGES
FABRICATION TOL. ± 1/16"
ANGULAR ± 1°
MACHINING TOLERANCES
FRACTIONAL ± .015
DECIMAL ± .010
XXX ± .005

THIS DOCUMENT IS THE PROPERTY OF HI-VAC, CORP. AND IS FURNISHED FOR AUTHORIZED USE ONLY, NEITHER THIS DOCUMENT NOR THE INFORMATION DISCLOSED HEREIN SHALL BE COPIED, REPRODUCED, TRANSFERRED OR USED FOR MANUFACTURING OR FOR ANY OTHER PURPOSE EXCEPT AS AUTHORIZED IN WRITING BY HI-VAC, CORP.

AQUATECH
A PRODUCT OF HI-VAC CORPORATION
117 INDUSTRY ROAD MARIETTA, OHIO 45750 USA
PHONE +740.374.9171 FAX +740.374.5447

SCALE:	WEIGHT:	DRAWN BY: RLF	PRODUCT CODE:
DWG SIZE: B	DATE: 5-4-09	CHECKED BY:	B-OPTION

DESCRIPTION: LEVEL WIND,CLAM SHELL W/COUNTER,F.R.

MATERIAL: SEE B.O.M.	PART NUMBER: 246970-4	REV: –
RAW MAT'L.:		

PART NO.: 244630-1	DESCRIPTION: LEVEL WIND ASSY, FRONT REEL		
ITEM	PART NO.	REQ'D.	DESCRIPTION
1	152040	1	GREASE NIPPLE
2	244629-1	1	SUPPORT ARM ASSY
3	240686	1	LEVEL WIND HANDLE
4	107484	2	SAFETY PIN
5	244628-1	1	TELESCOPIC ARM ASSY
6	220940	1	HAND GRIP
7	239950	1	SLEEVE – INSERT – LEVEL WIND
8	107210	1	1/4" FLAT WASHER
9	220555	1	HOLDER, FEMALE, RUBBER
10	1070290	1	1/4" LOCK WASHER

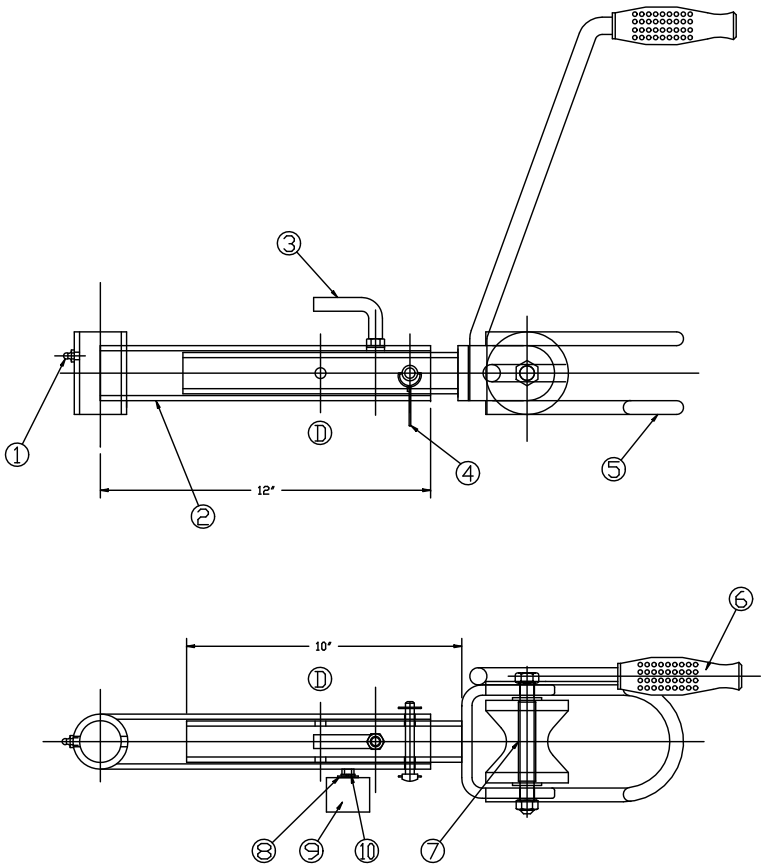

DO NOT SCALE

REV.	DESCRIPTION	DATE	BY	NEXT ASSY.
E				–
D				–
C				–
B				–
A	ADDED AND REVISED ITEM 7	5/15/12	SZF	

UNLESS OTHERWISE SPECIFIED

√=125 MICROINCHES
BREAK ALL EDGES
FABRICATION TOL. ± 1/16"
ANGULAR ± 1°

MACHINING TOLERANCES
FRACTIONAL ± .015
DECIMAL ± .010
XXX ± .005

THIS DOCUMENT IS THE PROPERTY OF HI-VAC, CORP. AND IS FURNISHED FOR AUTHORIZED USE ONLY, NEITHER THIS DOCUMENT NOR THE INFORMATION DISCLOSED HEREIN SHALL BE COPIED, REPRODUCED, TRANSFERRED OR USED FOR MANUFACTURING OR FOR ANY OTHER PURPOSE EXCEPT AS AUTHORIZED IN WRITING BY HI-VAC, CORP.

AQUATECH
A PRODUCT OF HI-VAC CORPORATION
117 INDUSTRY ROAD MARIETTA, OHIO 45750 USA
PHONE +740.374.9171 FAX +740.374.5447

SCALE: 3:1	WEIGHT:	DRAWN BY: RLF	PRODUCT CODE: SJ/B SERIES
DWG SIZE: B	DATE: 9-18-08	CHECKED BY:	

DESCRIPTION: LEVEL WIND ASSY, FRONT REEL, NO COUNTER

MATERIAL: SEE B/M	PART NUMBER: 244630-1	REV: A
RAW MAT'L.:		

PART NO.: 244630-3	DESCRIPTION: LEVEL WIND ASSY, FRONT REEL		
ITEM	PART NO.	REQ'D.	DESCRIPTION
1	152040	1	GREASE NIPPLE
2	244629-1M	1	SUPPORT ARM ASSY
3	240686	1	LEVEL WIND HANDLE
4			
5	244628-2	1	TELESCOPIC ARM ASSY
6	220940	1	HAND GRIP
7	239968	1	ROLLER ASSEMBLY
8	107210	1	1/4" FLAT WASHER
9	220555	1	HOLDER, FEMALE, RUBBER
10	107290	1	1/4" LOCK WASHER

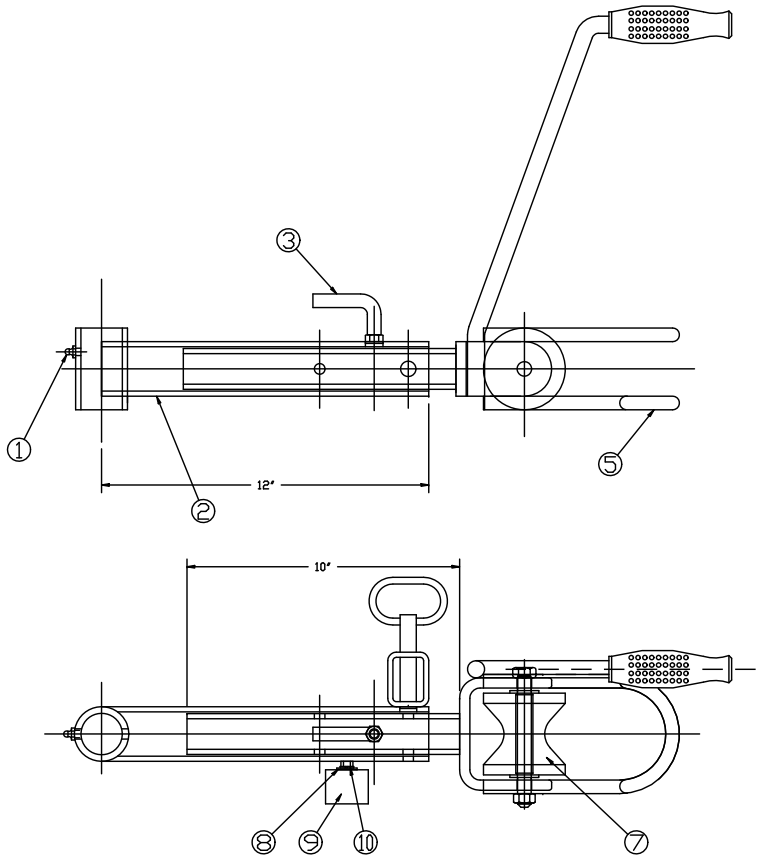

DO NOT SCALE

REV.	DESCRIPTION	DATE	BY	NEXT ASSY.
E				–
D				–
C				–
B				–
A	ADDED AND REVISED ITEM 7			

UNLESS OTHERWISE SPECIFIED
✓ =125 MICROINCHES
BREAK ALL EDGES
FABRICATION TOL. ± 1/16"
ANGULAR ± 1°

MACHINING TOLERANCES
FRACTIONAL ± .015
DECIMAL ± .010
XXX ± .005

THIS DOCUMENT IS THE PROPERTY OF HI-VAC, CORP. AND IS FURNISHED FOR AUTHORIZED USE ONLY, NEITHER THIS DOCUMENT NOR THE INFORMATION DISCLOSED HEREIN SHALL BE COPIED, REPRODUCED, TRANSFERRED OR USED FOR MANUFACTURING OR FOR ANY OTHER PURPOSE EXCEPT AS AUTHORIZED IN WRITING BY HI-VAC, CORP.

AQUATECH
A PRODUCT OF HI-VAC CORPORATION
117 INDUSTRY ROAD MARIETTA, OHIO 45750 USA
PHONE +740.374.9171 FAX +740.374.5447

SCALE: 3:1	WEIGHT:	DRAWN BY: RLF	PRODUCT CODE: SJ/B SERIES
DWG SIZE: B	DATE: 10-8-09	CHECKED BY:	

DESCRIPTION: LEVEL WIND ASSY, FRONT REEL, NO COUNTER

MATERIAL: SEE B/M	PART NUMBER: 244630-3	REV: A
RAW MAT'L.:		

PART NO.: 244630-5		DESCRIPTION: LEVEL WIND ASSY, FRONT REEL	
ITEM	PART NO.	REQ'D.	DESCRIPTION
1	152040	1	GREASE NIPPLE
2	244629-1M	1	SUPPORT ARM ASSY
3	240686	1	LEVEL WIND HANDLE
4			
5	244628-3	1	TELESCOPIC ARM ASSY
6	220940	1	HAND GRIP
7	239968	1	ROLLER ASSEMBLY
8	107210	1	1/4" FLAT WASHER
9	220555	1	HOLDER, FEMALE, RUBBER
10	107290	1	1/4" LOCK WASHER

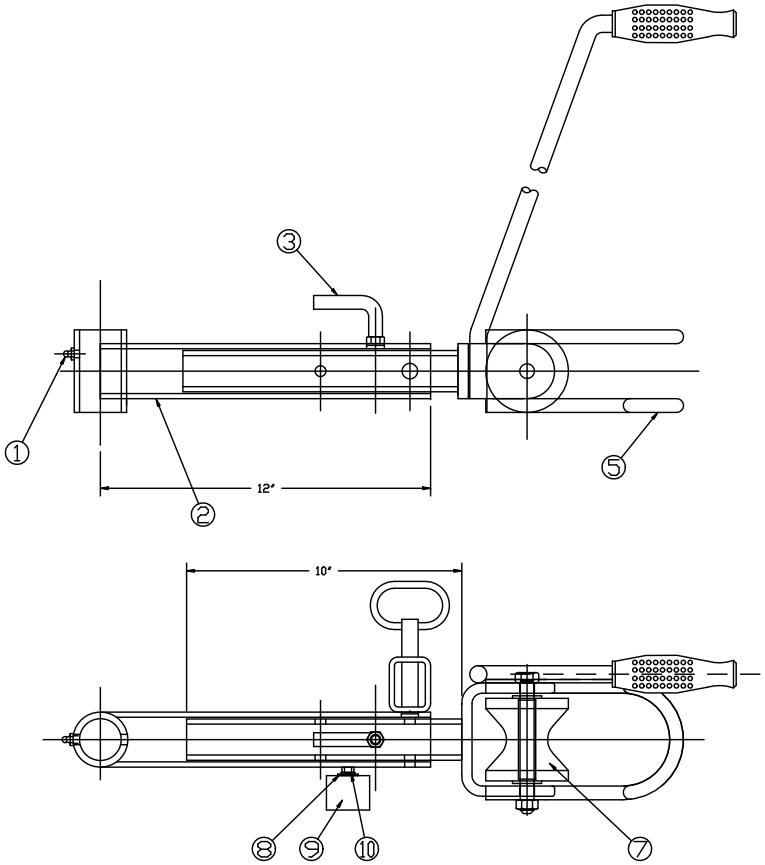

DO NOT SCALE

REV.	DESCRIPTION	DATE	BY	NEXT ASSY.
E				–
D				–
C				–
B				–
A				

UNLESS OTHERWISE SPECIFIED

√=125 MICROINCHES
BREAK ALL EDGES
FABRICATION TOL. ± 1/16"
ANGULAR ± 1°

MACHINING TOLERANCES
FRACTIONAL ± .015
DECIMAL ± .010
XXX ± .005

THIS DOCUMENT IS THE PROPERTY OF HI-VAC, CORP. AND IS FURNISHED FOR AUTHORIZED USE ONLY, NEITHER THIS DOCUMENT NOR THE INFORMATION DISCLOSED HEREIN SHALL BE COPIED, REPRODUCED, TRANSFERRED OR USED FOR MANUFACTURING OR FOR ANY OTHER PURPOSE EXCEPT AS AUTHORIZED IN WRITING BY HI-VAC, CORP.

AQUATECH
A PRODUCT OF HI-VAC CORPORATION
117 INDUSTRY ROAD MARIETTA, OHIO 45750 USA
PHONE +740.374.9171 FAX +740.374.5447

SCALE: 3:1	WEIGHT:	DRAWN BY: MLH	PRODUCT CODE: SJ/B SERIES
DWG SIZE: B	DATE: 06/03/14	CHECKED BY:	

DESCRIPTION: LEVEL WIND ASSY, FRONT REEL, NO COUNTER

MATERIAL: SEE B/M	PART NUMBER: 244630-5	REV: –
RAW MAT'L.:		

A249529

LEVEL WIND SNAP RETAINER SET

A220555 RUBBER FEMALE HALF **A220556 PLASTIC MALE HALF**

USED ON SOME SJ-600 TRAILERS, SJ-SERIES TRUCKS, FRONT REEL B-SERIES AND F-SERIES UNITS

HOSE REEL TENSION ROLLER OPTION

PART NO.	DESCRIPTION	A280408 QTY	A280409 QTY
A104444	CAP SCREW, 3/8-16 X 1-1/2", HEX HEAD	4	4
A107017	LOCKNUT, CRIMPED, 5/16"-18, PLATED	4	4
A107018	LOCKNUT, CRIMPED, 3/8"-16, PLATED	1	1
A107232	FLAT WASHER, 9/16", PLATED, G8	4	4
A107294	LOCK WASHER, 3/8", PLATED, G8	4	4
A107413	SNAP RING, EXTERNAL-5/8"DIA SHAFT	2	2
A152040	GREASE ZERK-1/8"NPT	2	2
A280408-1	MOUNT, TENSION ROLLER	1	1
A280408-2	MOUNT, TENSION ROLLER	1	1
A280408-3	WELDMENT, LEVER ARM, AIR CYLINDER	1	1
A382384	MOUNT ASSEMBLY - TENSION ROLLER	1	1
A382387 A	MIDDLE ROLLER	1	1
A382389 A	SHAFT, ROLLER, 5/8"DIA X 17-15/16" L	1	1
A382394 A	END ROLLER	2	2
U4002-0149	CLEVIS, PISTON ROD - AIR CYLINDER	1	1
U4002-0158	CYLINDER, AIR, 2"BORE - 3"STROKE	1	1
A380653	REGULATOR, AIR PRESSURE, W/GAUGE		1
A176010	TUBING, POLYETHYLENE, BLACK		6
A121240	SPLIT LOOM, 1/4"		6
02-3402	NIPPLE, SCH40 CS, 1/4" X 3", TBE		1
02-0256	PIPE ELBOW, 90°, 1/4"FNPT, 150#		1
A338728	MOUNT,GAUGE,REGULATOR-HOSE ROLLER		1

B-SERIES
PARTS COUNTERMAN'S CATALOG

Automatic Level Winds
Sub-Section

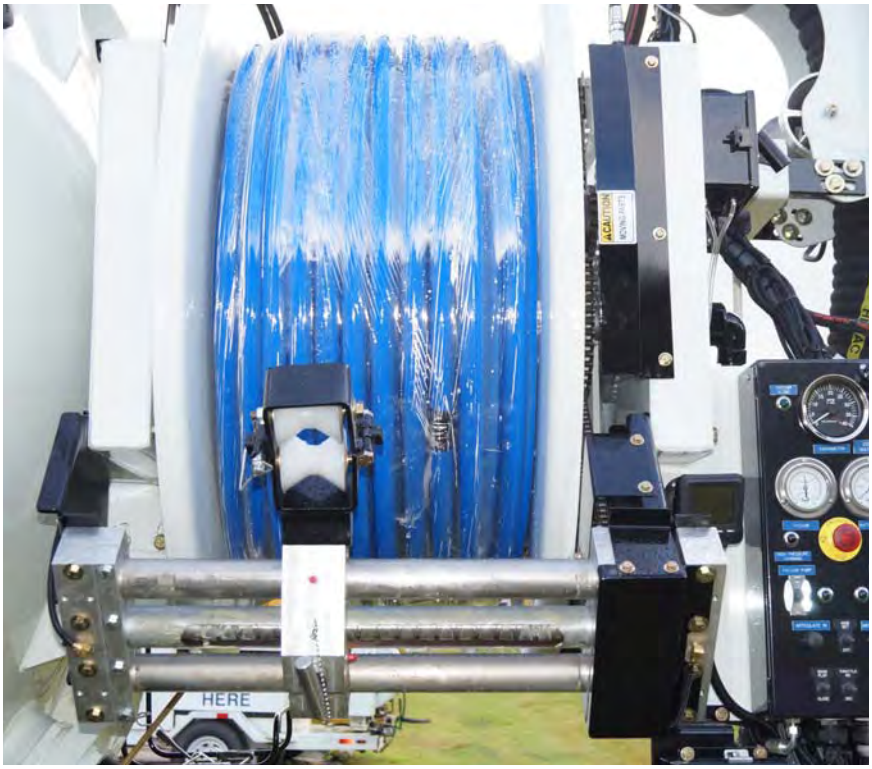

A382480-LANYARD

A382485

PART NO.: 382700		DESCRIPTION: ASSY. LEVEL WIND	
ITEM	PART NO.	REQ'D.	DESCRIPTION
1	382591	2	MOUNTING BLOCK
2	382481	1	PAWL HANDLE
3	382480	1	PAWL
4	382707	1	PAWL HOUSING
5	382478	1	REVERSING SHAFT
6	382485	1	RETACTABLE SPRING PLUNGER
7	152040	2	GREASE FITTING
8	382590	2	STABILIZER BAR
9		8	SET SCREW, 18–8 SS, 5/16"–18 x 1/2" LG
10	382704	2	CLAMPING BLOCK, COVER TUBE
11	382705	1	COVER TUBE, ø2–1/8" O.D x 25 1/4" LG
12		8	CAP SCREW, 3/8"–16 x 3 3/4" LG, GR 8
13		16	WASHER, LOCKING, ø3/8", PLATED
14		8	NUT, 3/8"–16, PLATED, GR.8
15	382480-LANYARD	1	LANYARD, PAWL HANDLE

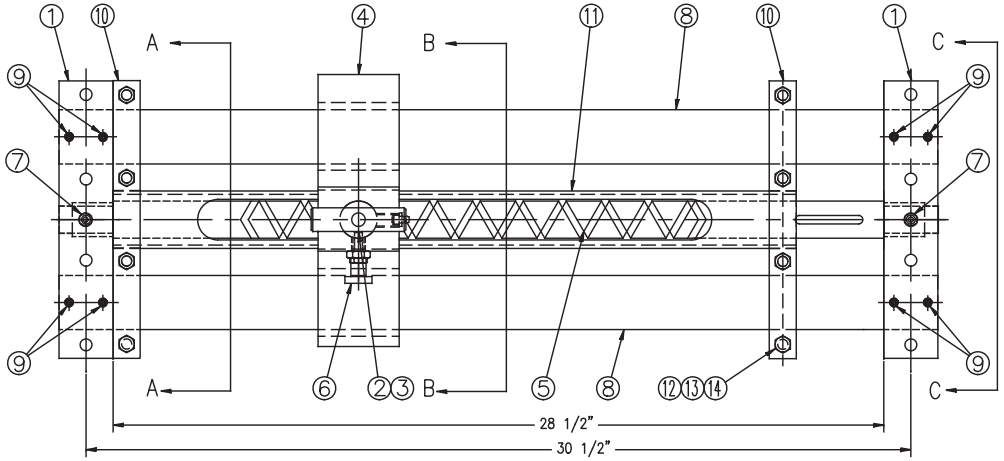

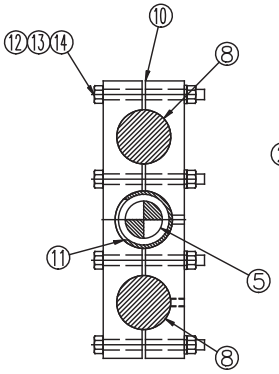

SECTION A–A

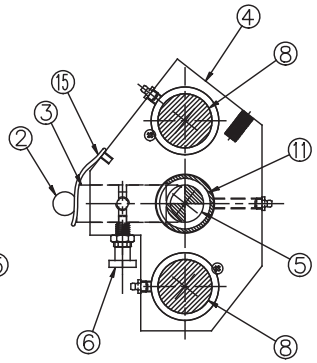

SECTION B–B

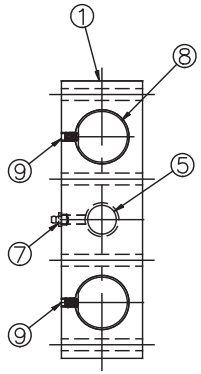

VIEW C–C

NEXT ASSY.
–
–
–
–

AQUATECH
A PRODUCT OF HI–VAC CORPORATION
117 INDUSTRY ROAD MARIETTA, OHIO 45750 USA
PHONE +740.374.9171 FAX +740.374.5447

REV.	DESCRIPTION	DATE	BY
A	REVISED PER PRODUCTION	03/13/07	SMW

SCALE: | WEIGHT: | DRAWN BY: LAG | PRODUCT CODE: B–SERIES
DWG SIZE: B | DATE: 02/20/07 | CHECKED BY:

DESCRIPTION: ASSEMBLY, LEVEL WIND

MATERIAL: PURCHASED ASSEMBLY
RAW MAT'L.: SEE B.O.M.
PART NUMBER: 382700
REV: A

UNLESS OTHERWISE SPECIFIED
√=125 MICROINCHES
BREAK ALL EDGES
FABRICATION TOL. ± 1/16"
ANGULAR ± 1°
MACHINING TOLERANCES
FRACTIONAL ± .015
DECIMAL ± .010
XXX ± .005

THIS DOCUMENT IS THE PROPERTY OF HI–VAC, CORP. AND IS FURNISHED FOR AUTHORIZED USE ONLY, NEITHER THIS DOCUMENT NOR THE INFORMATION DISCLOSED HEREIN SHALL BE COPIED, REPRODUCED, TRANSFERRED OR USED FOR MANUFACTURING OR FOR ANY OTHER PURPOSE EXCEPT AS AUTHORIZED IN WRITING BY HI–VAC, CORP.

PART NO.: 382477		DESCRIPTION: ASSY. LEVEL WIND	
ITEM	PART NO.	REQ'D.	DESCRIPTION
1	A382482	2	MOUNTING BLOCK
2	A382481	1	PAWL HANDLE
3	A382480	1	PAWL
4	A382479	1	PAWL HOUSING
5	A382478	1	REVERSING SHAFT
6	A382485	1	RETACTABLE SPRING PLUNGER
7	A152040	3	GREASE FITTING
8	382483	1	STABILIZER BAR

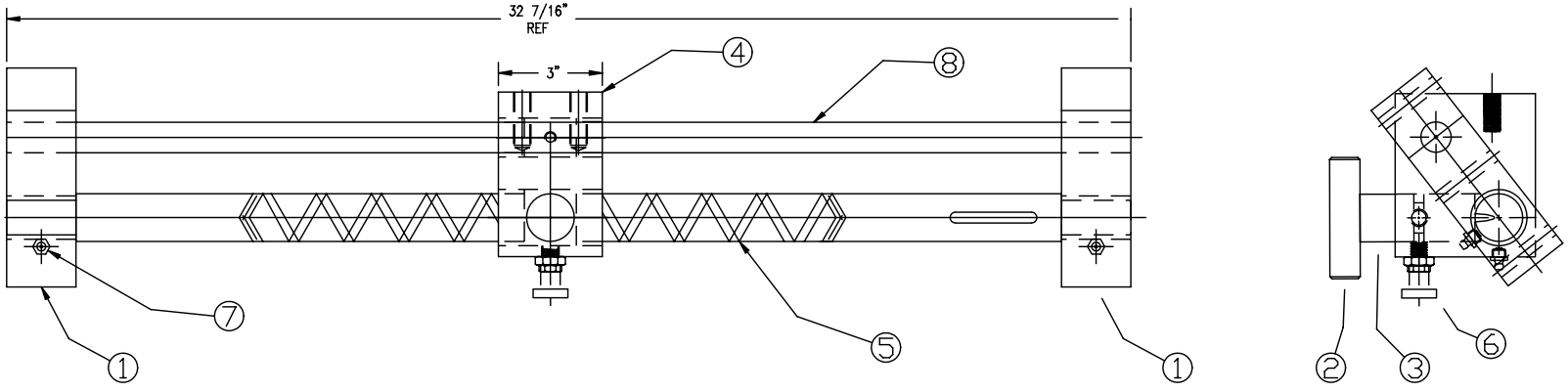

DO NOT SCALE

REV.	DESCRIPTION	DATE	BY

NEXT ASSY.
382508
–
–
–

AQUATECH
A PRODUCT OF HI-VAC CORPORATION
117 INDUSTRY ROAD MARIETTA, OHIO 45750 USA
PHONE +740.374.9171 FAX +740.374.5447

SCALE:	WEIGHT:	DRAWN BY: LAG	PRODUCT CODE:
DWG SIZE: B	DATE: 09/28/06	CHECKED BY:	B SERIES

DESCRIPTION: ASSEMBLY, LEVEL WIND

MATERIAL: PURCHASED ASSEMBLY
RAW MAT'L.: SEE B.O.M.
PART NUMBER: 382477
REV: –

UNLESS OTHERWISE SPECIFIED
√=125 MICROINCHES
BREAK ALL EDGES
FABRICATION TOL. ± 1/16"
ANGULAR ± 1°
MACHINING TOLERANCES
FRACTIONAL ± .015
DECIMAL ± .010
XXX ± .005

THIS DOCUMENT IS THE PROPERTY OF HI-VAC, CORP. AND IS FURNISHED FOR AUTHORIZED USE ONLY, NEITHER THIS DOCUMENT NOR THE INFORMATION DISCLOSED HEREIN SHALL BE COPIED, REPRODUCED, TRANSFERRED OR USED FOR MANUFACTURING OR FOR ANY OTHER PURPOSE EXCEPT AS AUTHORIZED IN WRITING BY HI-VAC, CORP.

Part Number A382508 AUTO LEVEL WIND INSTALLATION

Level	Part Number	Description	Quantity	U/M	SC
1	A382477	AUTO LEVEL WIND,B-SERIES,REAR	1	EA	P
	See A382477 drawing for components				
1	A382516	ASSEMBLY,HOSE GUIDE,LEVEL WIND	1	EA	M
	See A382516 drawing for components				
1	A382517	PLATE,SUPPORT,LEVEL WIND	2	EA	M
1	OBJ-2430D	INTEL-A-COUNT W/ ENCODER	1	EA	P
1	A382506	SPROCKET,18T,1 3/8"BORE,40BS18	1	EA	P
1	A236226	5/16" SQUARE KEYSTOCK, PER FT	.0833	FT	P
1	A160447	CHAIN,#40,1/2" PITCH ANSI STD.	6.2500	FT	P
1	A160826	#40 CONNECTING LINK	1	EA	P
1	A382507	MOUNT BLOCK,SHAFT,INTELA-COUNT	1	EA	M
1	A382509	COLLAR,SHAFT,3/4 TWO PC. CLAMP	2	EA	P
1	A382513	BEARING,THRUST, 3/4x3/32x1 9/1	2	EA	P
1	A382561	SPROCKET,60BS16, 3/4" BORE	1	EA	P
1	A382511	3/16" SQ. KEY x 1 1/4" LONG	1	EA	M
1	A382514	SHAFT,INTELA-COUNT	1	EA	M
1	A338726	CHAIN GUARD,AUTO LEVEL WIND	1	EA	M

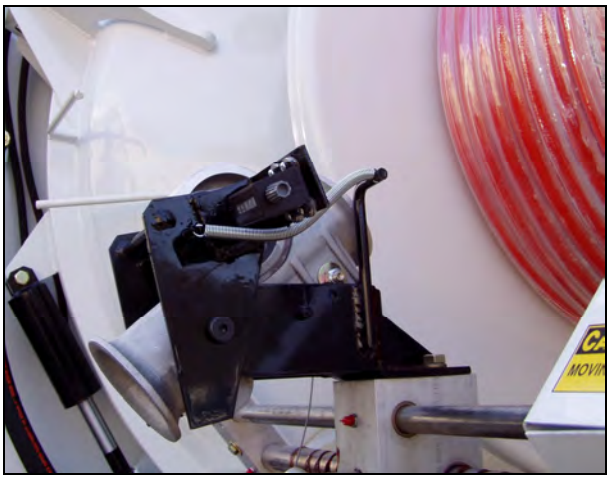

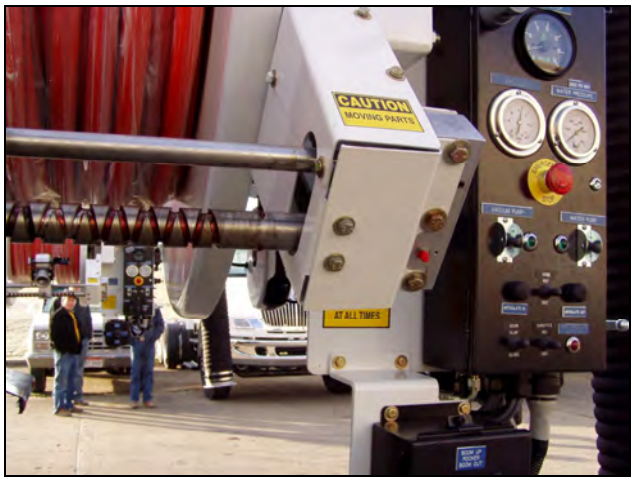

Part Number A382703-1 * ASSEMBLY,AUTO LEVEL WIND,W/O COUNTER

Level	Part Number	Description	Quantity	U/M	SC
1	A382700	ASSEMBLY,LEVEL WIND	1	EA	P
	See A382700 drawing for components				
1	A382595	ASSEMBLY,HOSE GUIDE,AUTO LEVEL	1	EA	M
2	A382592	WELDMENT,HOSE GUIDE HALF,AUTO	1	EA	M
2	A382593	HINGE PIN,HOSE GUIDE	1	EA	M
2	A383094	PIN,LEVELWIND,3"	1	EA	P
2	A191750 Omit	ROLLER,LEVEL WIND	2	EA	P
2	A384768 Add	ROLLER,AUTO LEVELWIND,UHMW	2	EA	M
2	A107226 Add	WASHER,FLAT,1/2" USS,PLATED,GR	8	EA	P
2	A107020 Add	LOCKNUT,NYLON,1/2"-13,PLATED,G	2	EA	P
2	A105223 Add	SCREW,CAP,1/2-13 X 5",HH,PLT,G	2	EA	P
2	A239950	SLEEVE,LEVEL WIND	2	EA	M
2	A239947	PIN,LEVEL WIND	2	EA	M
2	A107268 Omit	PIN,COTTER,1/8" X 1-1/2"	4	EA	P
2	A107282	PIN,SPRING,1/8" X 1"	2	EA	P
2	A382597	WELDMENT,HOSE GUIDE HALF & MOU	1	EA	M
3	A382592	WELDMENT,HOSE GUIDE HALF,AUTO	1	EA	M
3	A382596	WELDMENT,MOUNTING BRACKET,HOSE	1	EA	M
1	A382702	PLATE, SIDE SUPPORT, LEVEL WIN	2	EA	M
1	A382506	SPROCKET,18T,1 3/8"BORE,40BS18	1	EA	P
1	A236226	5/16" SQUARE KEYSTOCK, PER FT	.0833	FT	P
1	A160447	CHAIN,#40,1/2" PITCH ANSI STD.	6.3000	FT	P
1	A160826	#40 CONNECTING LINK	1	EA	P
1	A382708	CHAIN GUARD,AUTO LEVEL WIND	1	EA	M
1	A338374	WELDMENT,HOSE REEL GUARD,AUTO	1	EA	M
1	A338336-1	WELDMENT,REEL GUARD,AUTO LEVEL	1	EA	M

Rubber to plastic roller revision

PHOTOS ON FOLLOWING PAGE

A382703-1 AUTO LEVELWIND

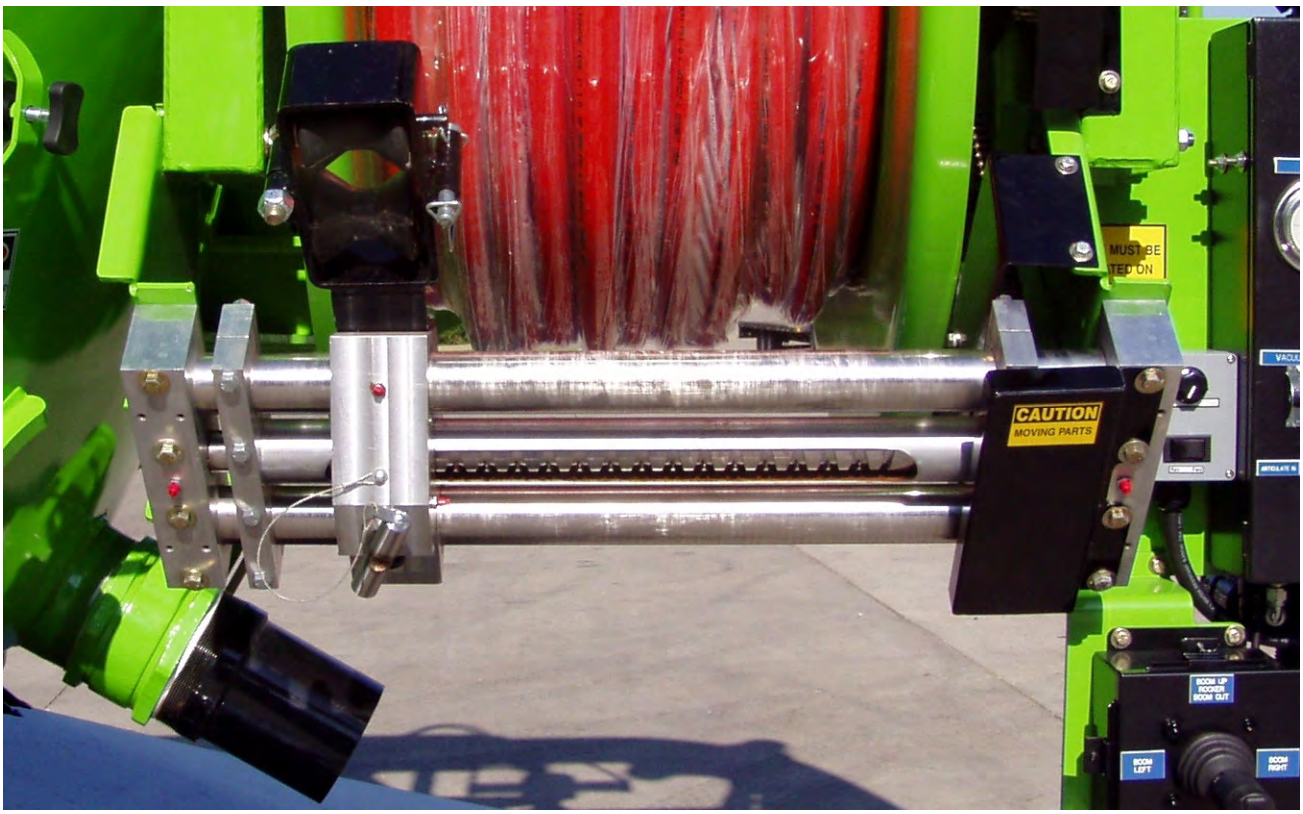

With revised hose guide (plastic rollers)

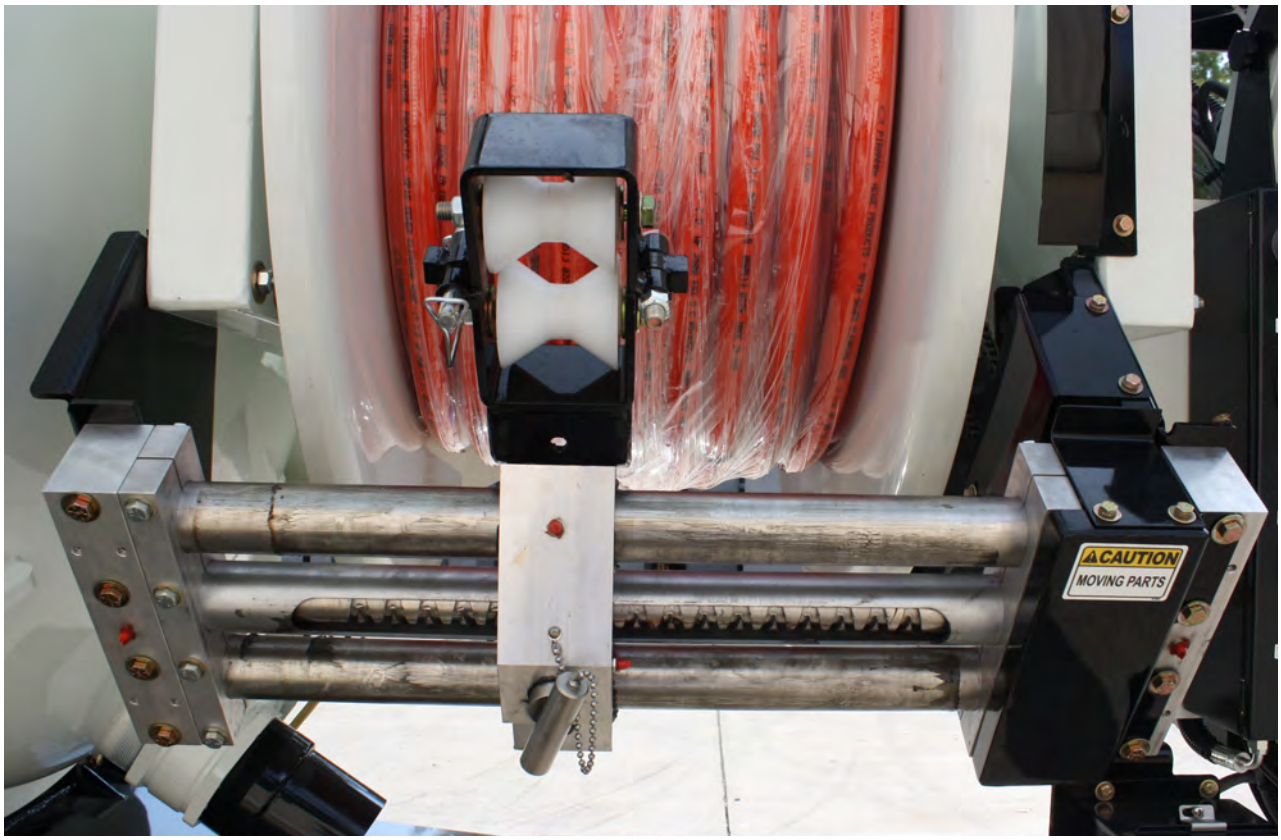

PART NO.: 382595	DESCRIPTION: ASSEMBLY, HOSE GUIDE		
ITEM	PART NO.	REQ'D.	DESCRIPTION
1	A382592	1	WELDMENT, HOSE GUIDE HALF
2	A382593	1	HINGE PIN, ø1/2"
3	A383094	1	PIN, LEVELWIND, 3"
4	A191750	2	ROLLER, LEVEL WIND
5	A239950	2	SLEEVE – INSERT
6	A239947	2	PIN, ROLLER
7	A107226	8	WASHER, FLAT, 1/2", PLATED
8	A107268	4	COTTER PIN, 1/8" x 1 1/2" LG
9	A107282	2	PIN, SPRING, ø1/8" x 1" LG
10	A102804	–	HAIRPIN
11	A382597	1	WELDMENT, HOSE GUIDE & MOUNT

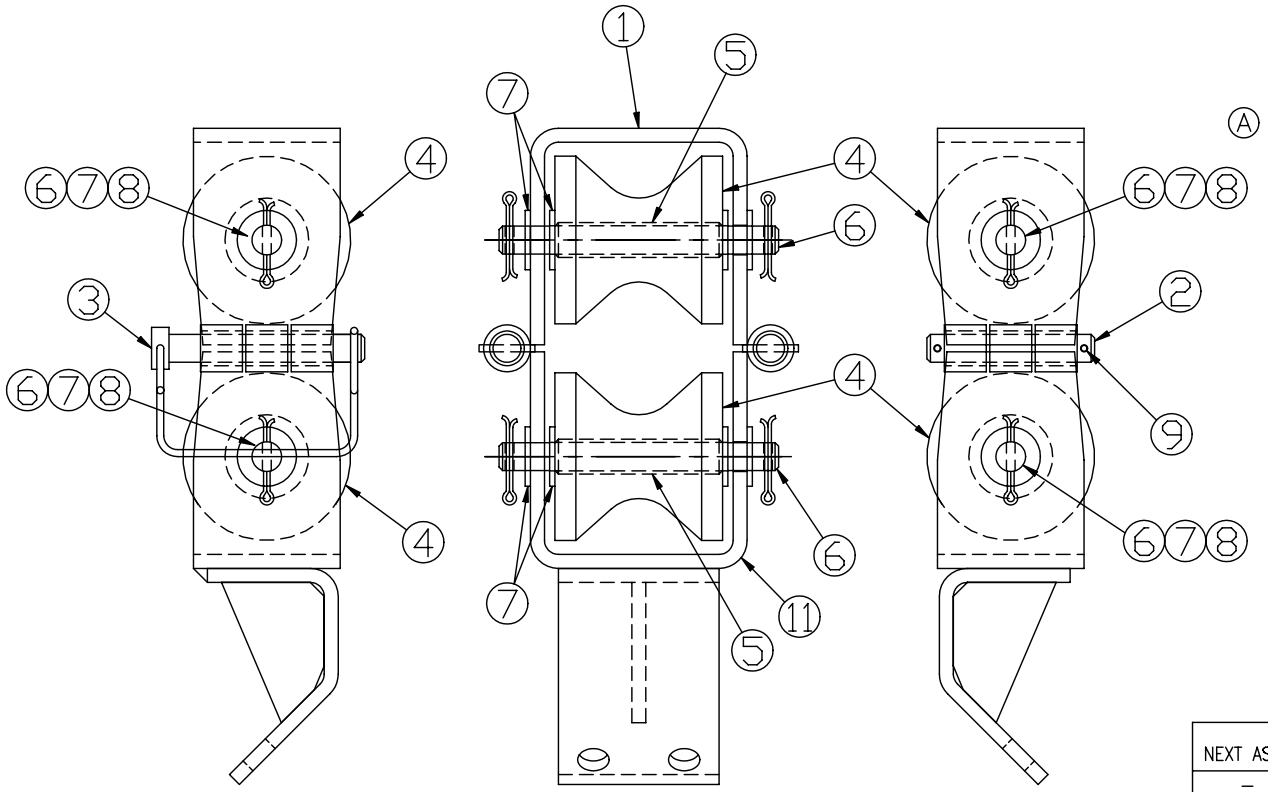

REV.	DESCRIPTION	DATE	BY	NEXT ASSY.
				–
				–
				–
B				–
A	IT 3 WAS 382594; DEL IT 10	04/17/07	RAE	

UNLESS OTHERWISE SPECIFIED

√=125 MICROINCHES
BREAK ALL EDGES
FABRICATION TOL. ± 1/16"
ANGULAR ± 1°

MACHINING TOLERANCES
FRACTIONAL ± .015
DECIMAL ± .010
XXX ± .005

THIS DOCUMENT IS THE PROPERTY OF HI-VAC, CORP. AND IS FURNISHED FOR AUTHORIZED USE ONLY, NEITHER THIS DOCUMENT NOR THE INFORMATION DISCLOSED HEREIN SHALL BE COPIED, REPRODUCED, TRANSFERRED OR USED FOR MANUFACTURING OR FOR ANY OTHER PURPOSE EXCEPT AS AUTHORIZED IN WRITING BY HI-VAC, CORP.

AQUATECH
A PRODUCT OF HI-VAC CORPORATION
117 INDUSTRY ROAD MARIETTA, OHIO 45750 USA
PHONE +740.374.9171 FAX +740.374.5447

SCALE: NONE	WEIGHT:	DRAWN BY: SMW	PRODUCT CODE: B-SERIES/SPL
DWG SIZE: B	DATE: 02/04/07	CHECKED BY:	

DESCRIPTION: ASSEMBLY, HOSE GUIDE, AUTO LEVEL WIND

MATERIAL: SEE B.O.M.	PART NUMBER: 382595	REV: A
RAW MAT'L.: –		

Part Number A382703-2 AUTO LEVELWIND ASSY,W/MECH. COUNTER

Level	Part Number	Description	Quantity	U/M	SC
1	A382700	ASSEMBLY,LEVEL WIND	1	EA	P
	See A382700 drawing for components				
1	A382516	ASSEMBLY,HOSE GUIDE,LEVEL WIND	1	EA	M
	See A382516 drawing for components				
1	A382702	PLATE, SIDE SUPPORT, LEVEL WIN	2	EA	M
1	A382506	SPROCKET,18T,1 3/8"BORE,40BS18	1	EA	P
1	A236226	5/16" SQUARE KEYSTOCK, PER FT	.0833	FT	P
1	A160447	CHAIN,#40,1/2" PITCH ANSI STD.	6.3000	FT	P
1	A160826	#40 CONNECTING LINK	1	EA	P
1	A382708	CHAIN GUARD,AUTO LEVEL WIND	1	EA	M

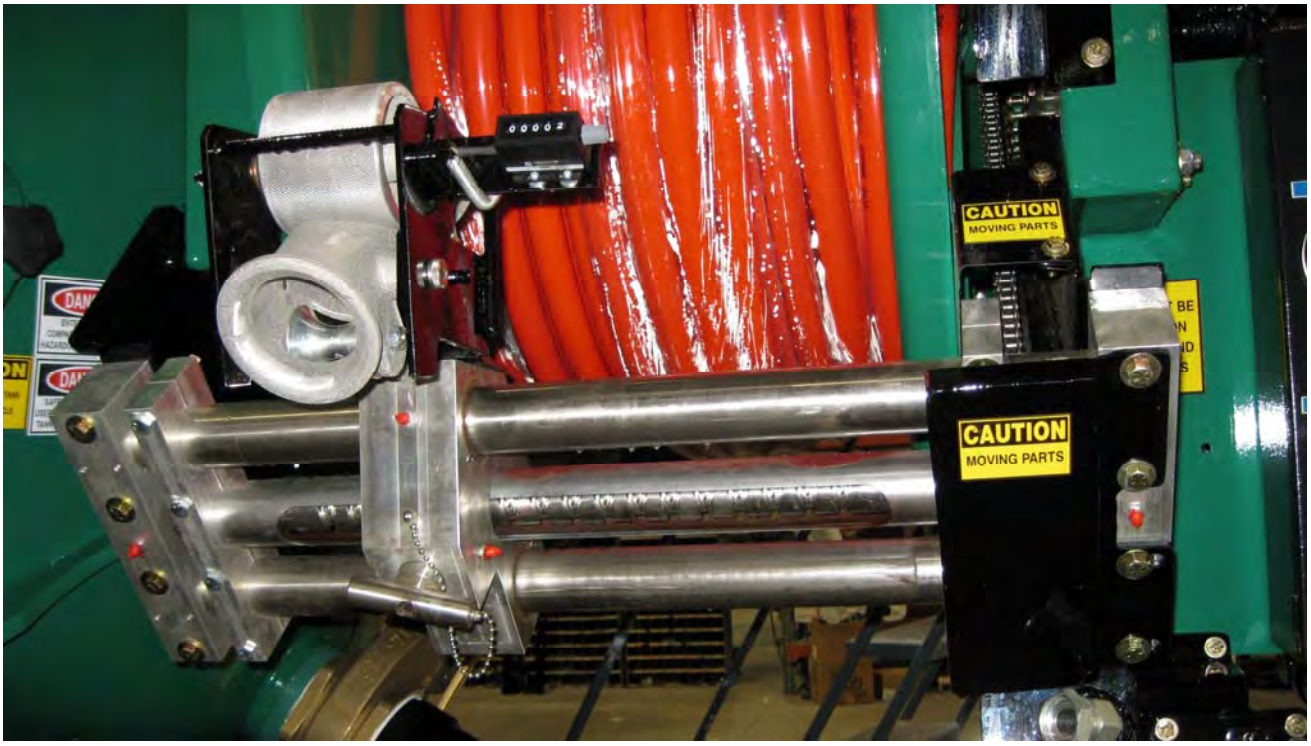

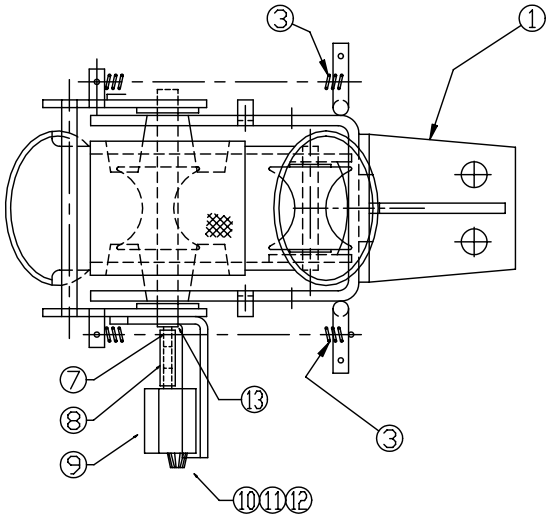

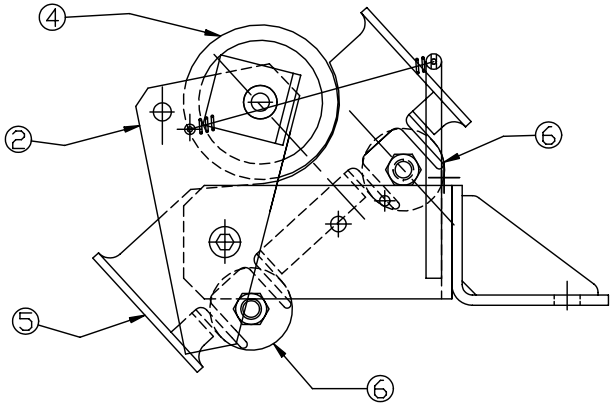

PART NO.: 382516		DESCRIPTION: ASSEMBLY, HOSE GUIDE	
ITEM	PART NO.	REQ'D.	DESCRIPTION
1	382515	1	WELDMENT, HOSE GUIDE
Ⓐ 2	381450–1	1	WELDMENT, COUNTER ROLLER BRACKET
3	220920	2	SPRING, EXTENSION, 3/8"
4	222820	1	ROLLER, LEVEL WIND
5	222810	1	TUBE HOSE GUIDE
6	152630	2	ROLLER, LEVEL WIND
7	234264–10	1	ROUND BAR, ø1/8" x 1" LG
8	234265–10	1	PLASTIC TUBE, 1–1/4" LG
Ⓐ 9	220975	1	COUNTER
10	107004	4	NUT, #6–32, HEX, PLATED
11	103548	4	SCREW, #6–32 x 3/4" LG, ROUND MACHINE
12	107286	4	WASHER, #6, LOCK, PLATED
13	222857	1	SHAFT, ø1/2", LEVEL WIND COUNTER

NEXT ASSY.
382508
–
–
–

AQUATECH
A PRODUCT OF HI–VAC CORPORATION
117 INDUSTRY ROAD MARIETTA, OHIO 45750 USA
PHONE +740.374.9171 FAX +740.374.5447

REV.	DESCRIPTION	DATE	BY
○			
Ⓐ	IT. #2 WAS 381450; IT. #9 WAS 220980	12/13/06	RAE

UNLESS OTHERWISE SPECIFIED
√=125 MICROINCHES
BREAK ALL EDGES
FABRICATION TOL. ± 1/16"
ANGULAR ± 1°
MACHINING TOLERANCES
FRACTIONAL ± .015
DECIMAL ± .010
XXX ± .005

THIS DOCUMENT IS THE PROPERTY OF HI–VAC, CORP. AND IS FURNISHED FOR AUTHORIZED USE ONLY, NEITHER THIS DOCUMENT NOR THE INFORMATION DISCLOSED HEREIN SHALL BE COPIED, REPRODUCED, TRANSFERRED OR USED FOR MANUFACTURING OR FOR ANY OTHER PURPOSE EXCEPT AS AUTHORIZED IN WRITING BY HI–VAC, CORP.

SCALE:	WEIGHT:	DRAWN BY: LAG	PRODUCT CODE:
DWG SIZE: B	DATE: 09/25/06	CHECKED BY:	B–SERIES

DESCRIPTION: ASSEMBLY, HOSE GUIDE, LEVEL WIND

MATERIAL: SEE B.O.M.	PART NUMBER: 382516	REV: A
RAW MAT'L.:		

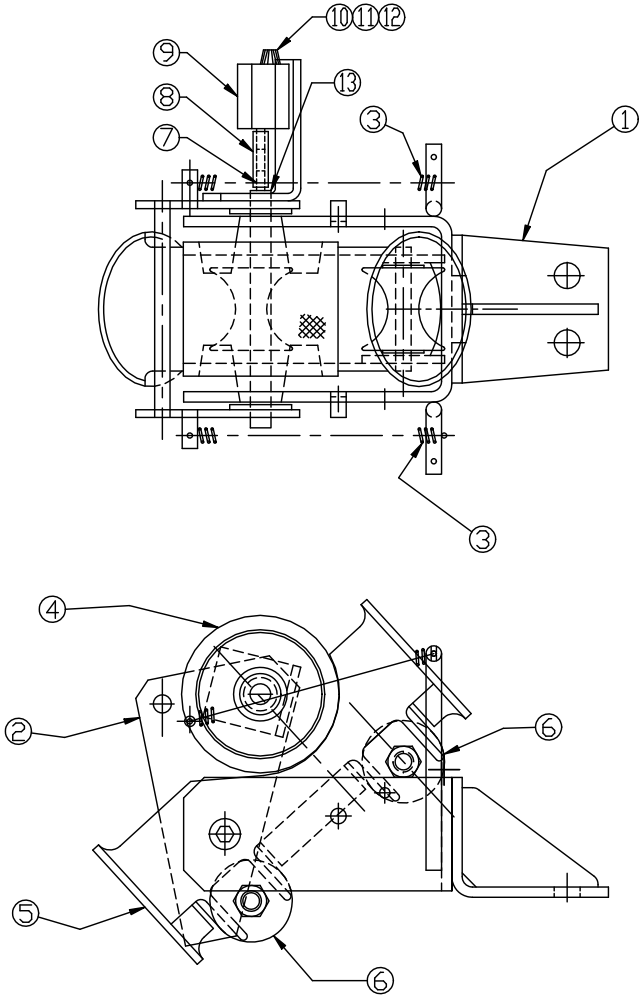

PART NO.: 382516		DESCRIPTION: ASSEMBLY, HOSE GUIDE	
ITEM	PART NO.	REQ'D.	DESCRIPTION
1	382515	1	WELDMENT, HOSE GUIDE
A 2	381450–1	1	WELDMENT, COUNTER ROLLER BRACKET
3	220920	2	SPRING, EXTENSION, 3/8"
4	222820	1	ROLLER, LEVEL WIND
5	222810	1	TUBE HOSE GUIDE
6	152630	2	ROLLER, LEVEL WIND
7	234264–10	1	ROUND BAR, ø1/8" x 1" LG
8	234265–10	1	PLASTIC TUBE, 1–1/4" LG
B A 9	220980	1	DIGITAL COUNTER, RH–TOP GOING
10	107004	4	NUT, #6–32, HEX, PLATED
11	103548	4	SCREW, #6–32 x 3/4" LG, ROUND MACHINE
12	107286	4	WASHER, #6, LOCK, PLATED
13	222857	1	SHAFT, ø1/2", LEVEL WIND COUNTER

NEXT ASSY.
382508
–
–
–

AQUATECH
A PRODUCT OF HI–VAC CORPORATION
117 INDUSTRY ROAD MARIETTA, OHIO 45750 USA
PHONE +740.374.9171 FAX +740.374.5447

REV.	DESCRIPTION	DATE	BY
B	ITEM 9 WAS 220975, FLIPPED COUNTER TO OPPOSITE SIDE	2/27/12	EP
A	IT. #2 WAS 381450; IT. #9 WAS 220980	12/13/06	RAE

UNLESS OTHERWISE SPECIFIED
✓=125 MICROINCHES
BREAK ALL EDGES
FABRICATION TOL. ± 1/16"
ANGULAR ± 1°
MACHINING TOLERANCES
FRACTIONAL ± .015
DECIMAL ± .010
XXX ± .005

THIS DOCUMENT IS THE PROPERTY OF HI–VAC, CORP. AND IS FURNISHED FOR AUTHORIZED USE ONLY, NEITHER THIS DOCUMENT NOR THE INFORMATION DISCLOSED HEREIN SHALL BE COPIED, REPRODUCED, TRANSFERRED OR USED FOR MANUFACTURING OR FOR ANY OTHER PURPOSE EXCEPT AS AUTHORIZED IN WRITING BY HI–VAC, CORP.

SCALE:	WEIGHT:	DRAWN BY: LAG	PRODUCT CODE:
DWG SIZE: B	DATE: 09/25/06	CHECKED BY:	B–SERIES

DESCRIPTION: ASSEMBLY, HOSE GUIDE, LEVEL WIND

MATERIAL: SEE B.O.M.	PART NUMBER: 382516	REV: B
RAW MAT'L.:		

A382703-3 AUTO WIND ASSY W/CLAMSHELL & MECH COUNTER

Level	Part Number	Description	Quantity	U/M	SC
1	A382700	ASSEMBLY,LEVEL WIND	1	EA	P
	See A382700 drawing for components				
1	A382515-CS	HOSE GUIDE,CLAM SHELL,WELDME3N	1	EA	M
1	A382702	PLATE, SIDE SUPPORT, LEVEL WIN	2	EA	M
1	A381953-2	COUNTER, HOSE, CLAM SHELL LEVE	1	EA	M
	See A381953-2 drawing for components				
1	A382506	SPROCKET,18T,1 3/8"BORE,40BS18	1	EA	P
1	A236226	5/16" SQUARE KEYSTOCK, PER FT	.0833	FT	P
1	A160447	CHAIN,#40,1/2" PITCH ANSI STD.	6.3000	FT	P
1	A160826	#40 CONNECTING LINK	1	EA	P
1	A382708	CHAIN GUARD,AUTO LEVEL WIND	1	EA	M
1	A382923	WELDMENT,COUPLER BRACKET,1",AU	1	EA	M
1	A338374	WELDMENT,HOSE REEL GUARD,AUTO	1	EA	M
1	A338336-1	WELDMENT,REEL GUARD,AUTO LEVEL	1	EA	M
1	A304350	CHAIN GUARD,AUTO LEVEL WIND,BE	1	EA	M
1	A338266	BRACKET, JOYSTICK, FRONT REEL	1	EA	M
1	A130901	VALVE,BALL,1",2000PSI	1	EA	P
1	TF3805X16	TEE-1" FEMALE RUN	1	EA	P
1	A130780	ADAPTER,ELBOW,45D,1MNPT X 1FNP	2	EA	P
1	A176109	HOSE ASSY,1"-R2-15",1MNPT-1MNP	1	EA	P

PART NO.: 382515-CS	DESCRIPTION: WELDMENT, HOSE GUIDE,CLAM SHELL		
ITEM	PART NO.	REQ'D.	DESCRIPTION
1	U4505-0001	1	PLATE, 1/4" x 3 9/16" x 6 1/4"
2			
3	A222852-CS	1	FRAME ARM, LH
4	A222851-CS	1	FRAME ARM, RH
5			
6	U4505-0001	1	PLATE, 1/4" x 2 7/8" x 3 5/16"

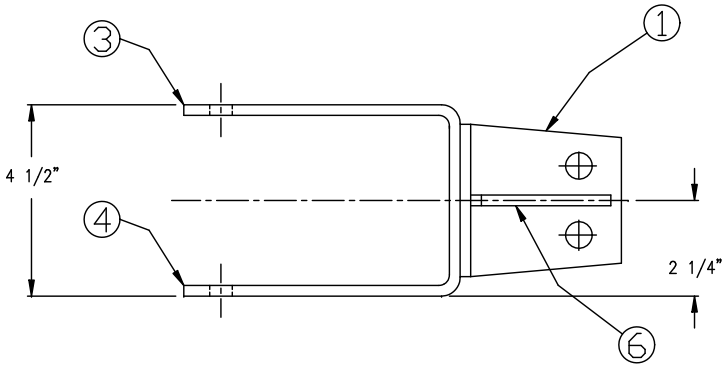

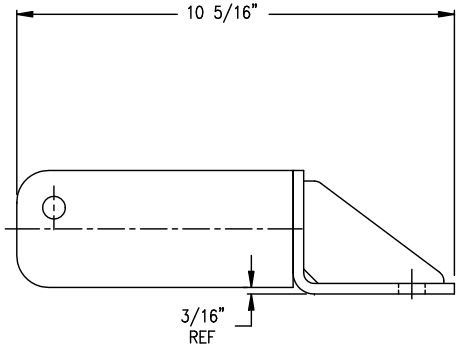

WELDED ASSEMBLY

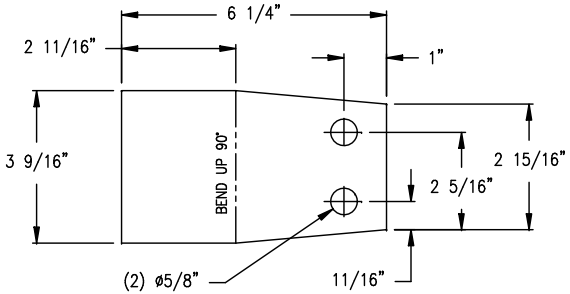

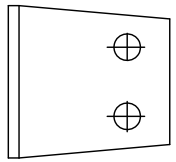

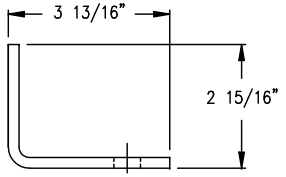

DETAIL ITEM 1 (1 REQ'D.)

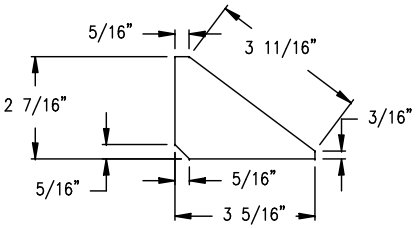

DETAIL ITEM 6 (1 REQ'D.)

REV.	DESCRIPTION	DATE	BY
Ⓑ		–	–
Ⓐ		–	–

NEXT ASSY.
–
–
–

UNLESS OTHERWISE SPECIFIED
√=125 MICROINCHES
BREAK ALL EDGES
FABRICATION TOL. ± 1/16"
ANGULAR ± 1°
MACHINING TOLERANCES
FRACTIONAL ± .015
DECIMAL ± .010
XXX ± .005

THIS DOCUMENT IS THE PROPERTY OF HI-VAC, CORP. AND IS FURNISHED FOR AUTHORIZED USE ONLY, NEITHER THIS DOCUMENT NOR THE INFORMATION DISCLOSED HEREIN SHALL BE COPIED, REPRODUCED, TRANSFERRED OR USED FOR MANUFACTURING OR FOR ANY OTHER PURPOSE EXCEPT AS AUTHORIZED IN WRITING BY HI-VAC, CORP.

AQUATECH
A PRODUCT OF HI-VAC CORPORATION
117 INDUSTRY ROAD MARIETTA, OHIO 45750 USA
PHONE +740.374.9171 FAX +740.374.5447

SCALE:	WEIGHT:	DRAWN BY: RLF	PRODUCT CODE:
DWG SIZE: C	DATE: 5-26-09	CHECKED BY:	B SERIES

DESCRIPTION: WELDMENT, HOSE GUIDE, CLAM SHELL

MATERIAL: SEE B.O.M. PART NUMBER: 382515-CS REV: –

RAW MAT'L.:

PART NO.: 381953-2		DESCRIPTION: COUNTER, HOSE, LEVEL WIND	
ITEM	PART NO.	REQ'D.	DESCRIPTION
1	381949-2	1	ROLLER HOUSING
2	242194-2	1	COUNTER ROLLER BRACKET
3	152630	4	ROLLER
4	222820	1	COUNTER ROLLER
5	220985	1	COUNTER, RH SHAFT, CCW
6	220920-1	2	SPRING, EXTENSION
7	222857	1	SHAFT
8	104418	2	SHOULDER BOLT
9	107226	2	WASHER, FLAT, 1/2
10	234265-10	1	TUBE, PLASTIC, 1 1/4 LG
–	–	–	–
–	–	–	–

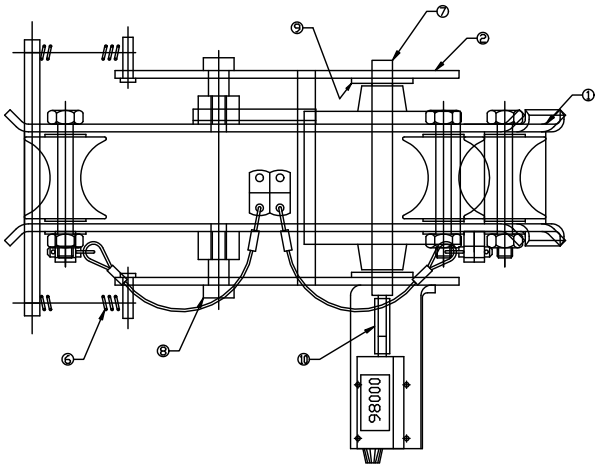

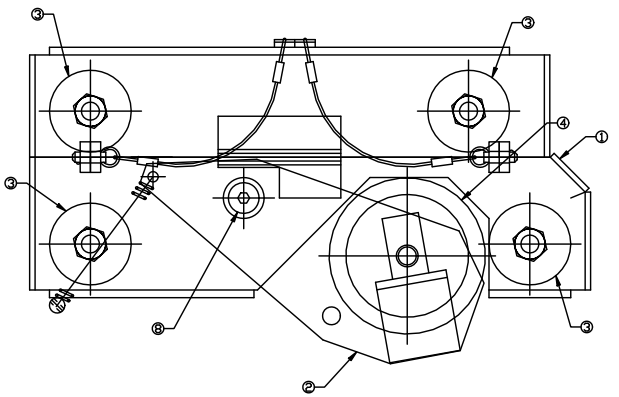

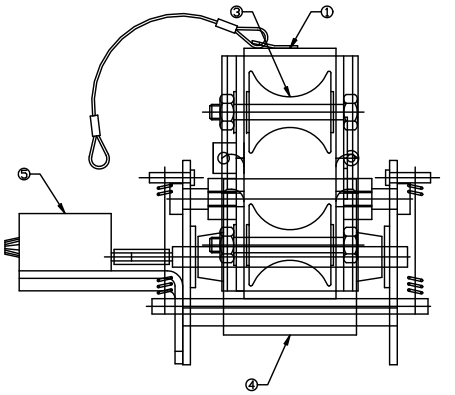

REV.	DESCRIPTION	DATE	BY	NEXT ASSY.
				–
				–
Ⓒ	CHANGED SPRING PART NO.	05/01/09	RP	–
Ⓑ	ADDED LANYARD	12/23/08	RP	–
Ⓐ	CH BOLTS TO QUICK CLIPS	12/9/08	RP	

UNLESS OTHERWISE SPECIFIED
√=125 MICROINCHES
BREAK ALL EDGES
FABRICATION TOL. ± 1/16"
ANGULAR ± 1°
MACHINING TOLERANCES
FRACTIONAL ± .015
DECIMAL ± .010
XXX ± .005

THIS DOCUMENT IS THE PROPERTY OF HI-VAC, CORP. AND IS FURNISHED FOR AUTHORIZED USE ONLY, NEITHER THIS DOCUMENT NOR THE INFORMATION DISCLOSED HEREIN SHALL BE COPIED, REPRODUCED, TRANSFERRED OR USED FOR MANUFACTURING OR FOR ANY OTHER PURPOSE EXCEPT AS AUTHORIZED IN WRITING BY HI-VAC, CORP.

AQUATECH
A PRODUCT OF HI-VAC CORPORATION
117 INDUSTRY ROAD MARIETTA, OHIO 45750 USA
PHONE +740.374.9171 FAX +740.374.5447

SCALE: NTS | WEIGHT: | DRAWN BY: RP | PRODUCT CODE:
DWG SIZE: C | DATE: 10/16/08 | CHECKED BY:

DESCRIPTION: COUNTER, HOSE, CLAM SHELL LEVEL WIND

MATERIAL:
RAW MAT'L:

PART NUMBER: 381953-2 | REV: C

A382703-FR AUTO LEVELWIND ASSY., FRONT REEL & SJ-SERIES

Level	Part Number	Description	Quantity	U/M	SC
1	A382700-FR	ASSY, LEVEL WIND, FRONT REEL	1	EA	P
	See A382700-FR drawing for components				
1	A382516-FR	ASSY,HOSE GUIDE,LEVEL WIND,FRO	1	EA	M
	See A382516-FR drawing for components				
1	A382702-FR	PLATE,SIDE SUPPORT,AUTO LEVEL	2	EA	M
1	A382506	SPROCKET,18T,1 3/8"BORE,40BS18	1	EA	P
1	A236226	5/16" SQUARE KEYSTOCK, PER FT	.0833	FT	P
1	A160447	CHAIN,#40,1/2" PITCH ANSI STD.	6.3000	FT	P
1	A160826	#40 CONNECTING LINK	1	EA	P
1	A382708-FR	CHAIN GUARD,AUTO LEVEL WIND,FR	1	EA	M
1	A304001	MOUNT,HOSE GUIDE,AUTO LEVEL WI	1	EA	M
1	A304002	WELDMENT, EXTENSION TUBE	1	EA	M
1	A304006	SUPPORT, CHAIN GUARD,F.R. AUTO	1	EA	M
1	A304026	CHAIN TENSIONER,#40 CHAIN,SEE	1	EA	P
1	A304027	BRACKET, MOUNTING, CHAIN TENSI	1	EA	M

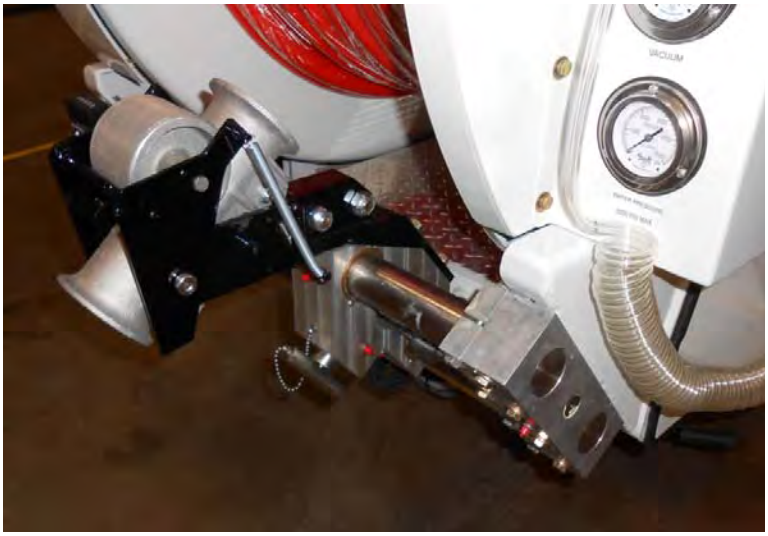

PART NO.: 382700–FR		DESCRIPTION: ASSY. LEVEL WIND, FRONT REEL	
ITEM	PART NO.	REQ'D.	DESCRIPTION
1	382591	2	MOUNTING BLOCK
2	382481	1	PAWL HANDLE
3	382480	1	PAWL
4	382707–FR	1	PAWL HOUSING
5	382478–FR	1	REVERSING SHAFT
6	382485	1	RETACTABLE SPRING PLUNGER
7	152040	2	GREASE FITTING
8	382590–FR	2	STABILIZER BAR
9		8	SET SCREW, 18–8 SS, 5/16"–18 x 1/2" LG
10	382704	2	CLAMPING BLOCK, COVER TUBE
11	382705–FR	1	COVER TUBE, ø2–1/8" O.D x 28 5/8" LG
12		8	CAP SCREW, 3/8"–16 x 3 3/4" LG, GR 8
13		16	WASHER, LOCKING, ø3/8", PLATED
14		8	NUT, 3/8"–16, PLATED, GR.8
15		1	LANYARD, PAWL HANDLE

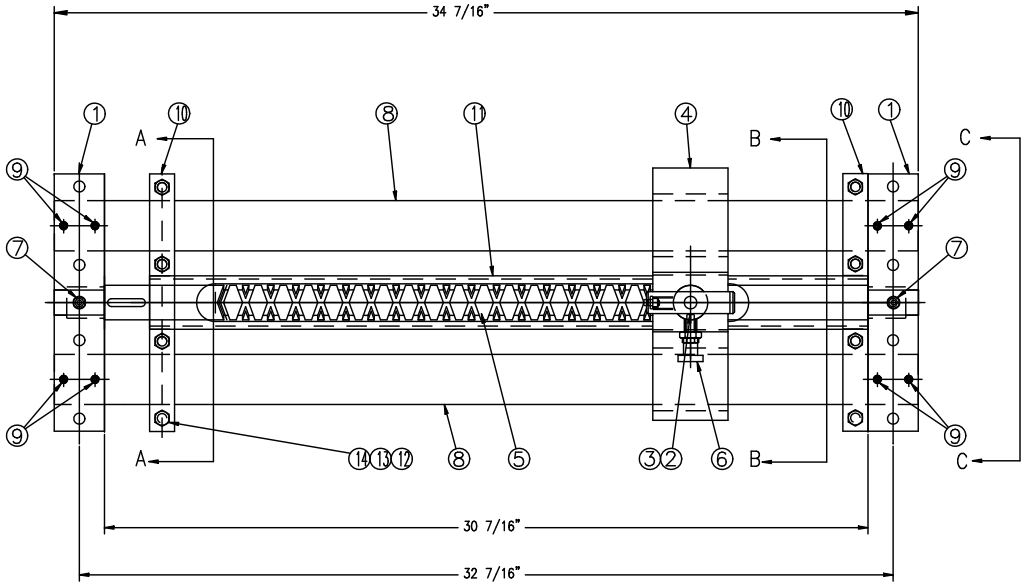

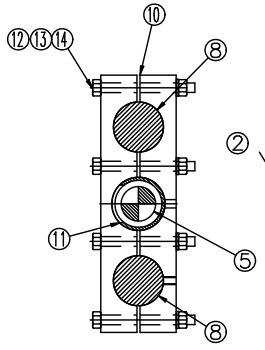

SECTION A–A

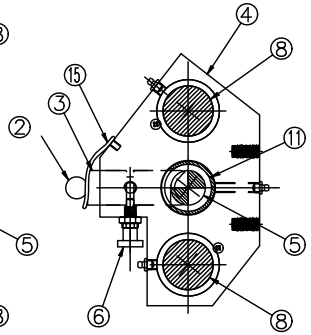

SECTION B–B

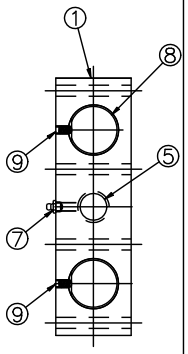

VIEW C–C

NEXT ASSY.
–
–
–
–

AQUATECH
A PRODUCT OF HI–VAC CORPORATION
117 INDUSTRY ROAD MARIETTA, OHIO 45750 USA
PHONE +740.374.9171 FAX +740.374.5447

REV.	DESCRIPTION	DATE	BY
Ⓐ	MIRRORED ASSEMBLY	6–4–08	RLF

SCALE:	WEIGHT:	DRAWN BY: RLF	PRODUCT CODE:
DWG SIZE: B	DATE: 5–14–08	CHECKED BY:	B–SERIES

DESCRIPTION: ASSEMBLY, LEVEL WIND, FRONT REEL

UNLESS OTHERWISE SPECIFIED
√=125 MICROINCHES
BREAK ALL EDGES
FABRICATION TOL. ± 1/16"
ANGULAR ± 1°
MACHINING TOLERANCES
FRACTIONAL ± .015
DECIMAL ± .010
XXX ± .005

THIS DOCUMENT IS THE PROPERTY OF HI–VAC, CORP. AND IS FURNISHED FOR AUTHORIZED USE ONLY, NEITHER THIS DOCUMENT NOR THE INFORMATION DISCLOSED HEREIN SHALL BE COPIED, REPRODUCED, TRANSFERRED OR USED FOR MANUFACTURING OR FOR ANY OTHER PURPOSE EXCEPT AS AUTHORIZED IN WRITING BY HI–VAC, CORP.

MATERIAL: PURCHASED ASSEMBLY	PART NUMBER:	REV:
RAW MAT'L.: SEE B.O.M.	382700–FR	A

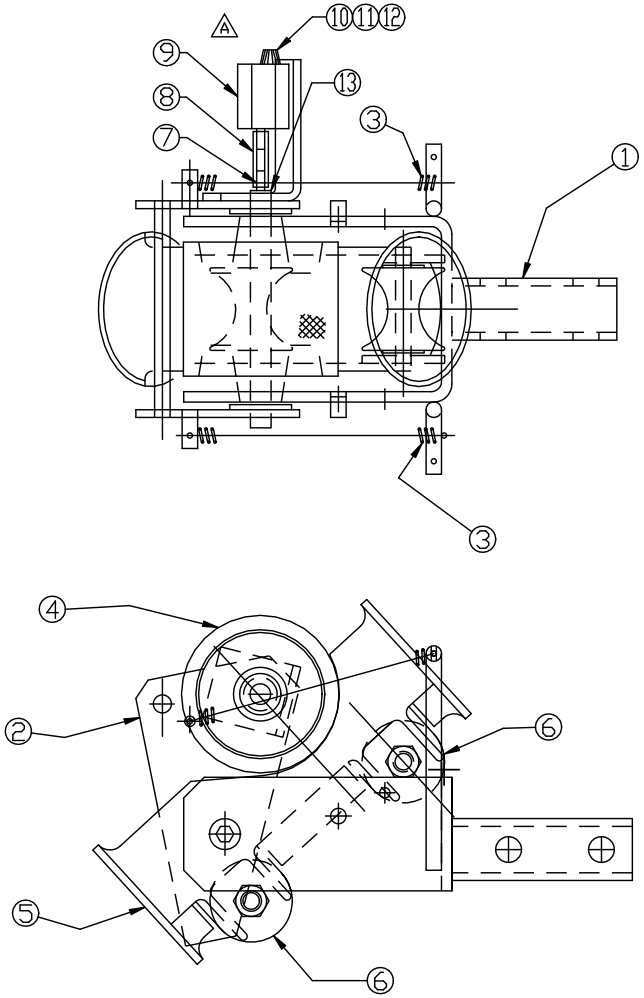

PART NO.: 382516–FR		DESCRIPTION: ASSEMBLY, HOSE GUIDE	
ITEM	PART NO.	REQ'D.	DESCRIPTION
1	382515–FR	1	WELDMENT, HOSE GUIDE
2	381450–1	1	WELDMENT, COUNTER ROLLER BRACKET
3	220920	2	SPRING, EXTENSION, 3/8"
4	222820	1	ROLLER, LEVEL WIND
5	222810	1	TUBE HOSE GUIDE
6	152630	2	ROLLER, LEVEL WIND
7	234264–10	1	ROUND BAR, ø1/8" x 1" LG
8	234265–10	1	PLASTIC TUBE, 1–1/4" LG
A 9	220980	1	DIGITAL COUNTER, RH–TOP GOING
10	107004	4	NUT, #6–32, HEX, PLATED
11	103548	4	SCREW, #6–32 x 3/4" LG, ROUND MACHINE
12	107286	4	WASHER, #6, LOCK, PLATED
13	222857	1	SHAFT, ø1/2", LEVEL WIND COUNTER

NEXT ASSY.
–
–
–
–

AQUATECH
A PRODUCT OF HI–VAC CORPORATION
117 INDUSTRY ROAD MARIETTA, OHIO 45750 USA
PHONE +740.374.9171 FAX +740.374.5447

REV.	DESCRIPTION	DATE	BY
A	ITEM 9 WAS 220975, FLIPPED COUNTER TO OPPOSITE SIDE	2/27/12	EP

SCALE:	WEIGHT:	DRAWN BY: RLF	PRODUCT CODE: B–SERIES
DWG SIZE: B	DATE: 7–30–08	CHECKED BY:	

DESCRIPTION: ASSEMBLY, HOSE GUIDE, LEVEL WIND

MATERIAL: SEE B.O.M.
RAW MAT'L.:
PART NUMBER: 382516–FR
REV: A

UNLESS OTHERWISE SPECIFIED
√ =125 MICROINCHES
BREAK ALL EDGES
FABRICATION TOL. ± 1/16"
ANGULAR ± 1°
MACHINING TOLERANCES
FRACTIONAL ± .015
DECIMAL ± .010
XXX ± .005

THIS DOCUMENT IS THE PROPERTY OF HI–VAC, CORP. AND IS FURNISHED FOR AUTHORIZED USE ONLY, NEITHER THIS DOCUMENT NOR THE INFORMATION DISCLOSED HEREIN SHALL BE COPIED, REPRODUCED, TRANSFERRED OR USED FOR MANUFACTURING OR FOR ANY OTHER PURPOSE EXCEPT AS AUTHORIZED IN WRITING BY HI–VAC, CORP.

B-SERIES
PARTS COUNTERMAN'S CATALOG

Sewer Hose Counters
Sub-Section

LEVEL WIND COUNTERS

This is an informational bulletin listing the various 5-digit rotary mechanical counters found on our hose reel level winds.

5-DIGIT MECHANICAL COUNTERS

PART NO.	TAG NO.	INPUT	COUNT UP DIRECTION	RANGE
NLA ~~A220975~~	~~7-2225~~	~~LH~~	~~Top Going~~	~~0 - 99999~~ *
A220976	7-2215	LH	Top Coming	0 - 99999
A220980	7-2245	RH	Top Going	0 - 99999
A220985	7-2235	RH	Top Coming	0 - 99999

** Can use A220985 but the display will be upside down.*

COMMON SPECIFICATIONS	
• **Input Shaft Diameter:**	**0.125"**
• **Ratio:**	**10 Counts/Revolution**
• **Temperature Range:**	**-15°F to +140°F**
• **Figures:**	**5 figures, white on black**
• **Weight:**	**1.5 oz.**

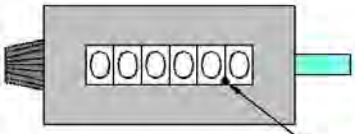

A220980-METER
(MODIFY P/N A220980)

PERMANENTLY MARK COUNTER WITH DECIMAL POINT HERE BY ETCHING SURFACE WITH EITHER A 1/16 END MIL OR ENGRAVER. FILL WITH WHITE PAINT.

HOSE REEL COUNTER

A220981

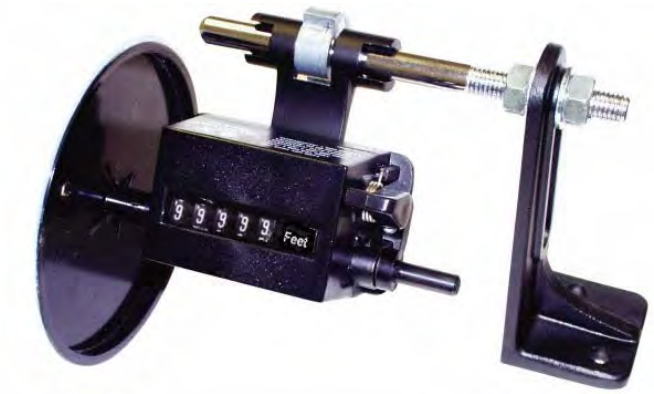

TRUMETER SERIES 2400

NOTE: No longer used – this page is for parts reference only. For complete replacement or a new installation, use one of the newer spring tension counter kits.

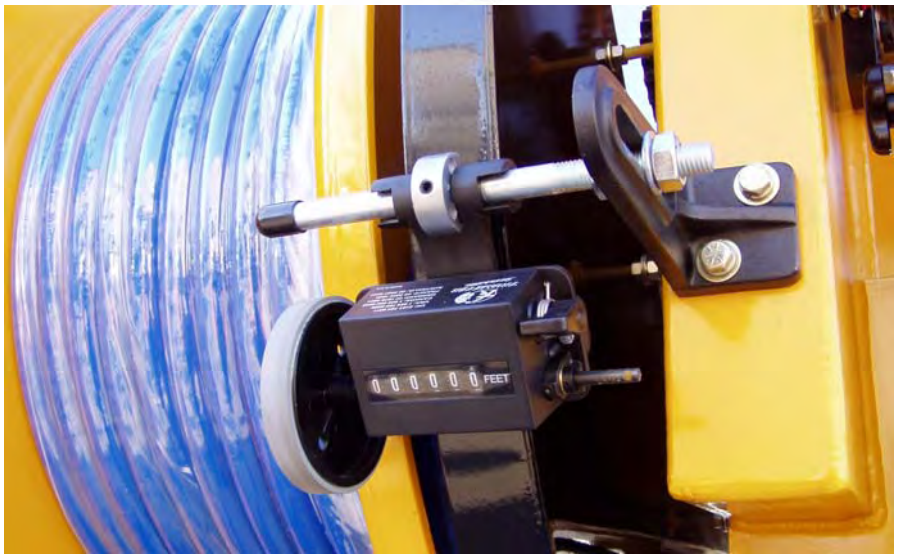

REPLACEMENT PARTS

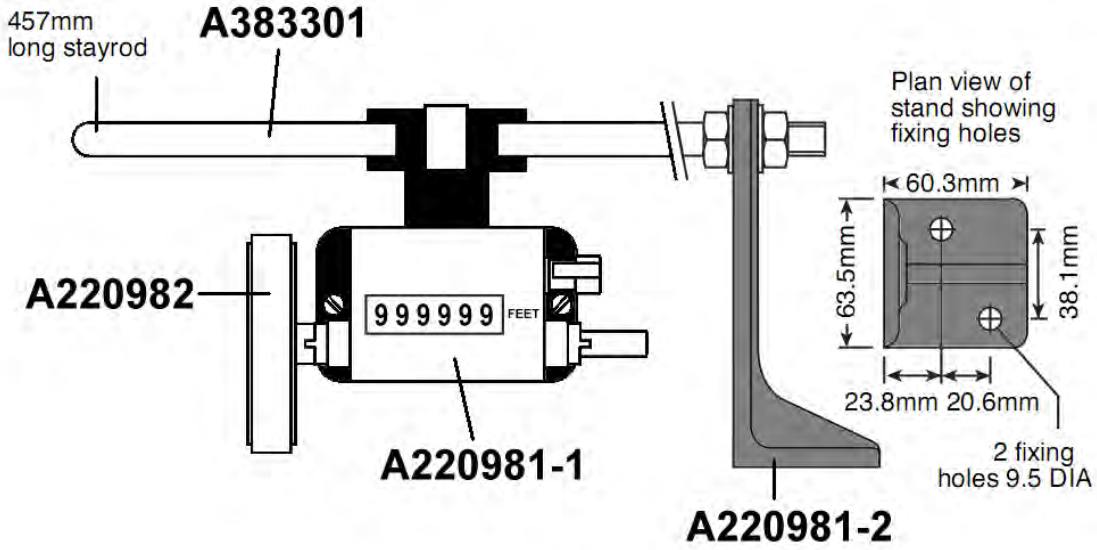

TRUMETER REEL COUNTER (Pre 2014 rev.)

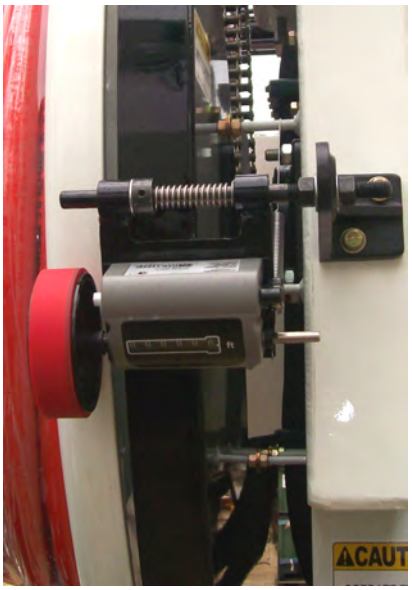

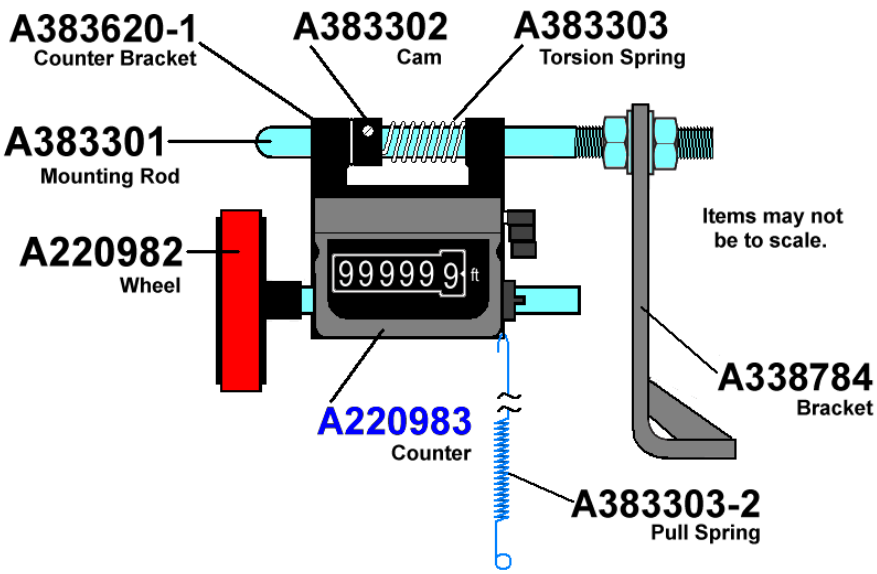

OBSOLETE INSTALLATIONS (FOR REF. ONLY)

Part Number A383276 * INSTL,REEL COUNTER,MECH, SPRING LOADED

Level	Part Number	Description	Quantity	U/M	SC
1	A220982	WHEEL,COUNTER,TRUMETER,ALUM.,R	1	EA	P
1	A220983	COUNTER,TRUMETER,TOP GOING,FEE	1	EA	P
1	A338784	WELDMENT,MOUNTING BRACKET,COUN	1	EA	M
1	A383301	ROD,COUNTER MOUNT,SPRING LOADE	1	EA	P
1	A383302	CAM,ADJUSTABLE,COUNTER MOUNT,S	1	EA	P
1	A383303	SPRING,COUNTER MOUNT,SPRING LO	1	EA	P
1	A383303-2	SPRING, TENSION, THROTTLE RETU	1	EA	P
1	A383620-1	BRACKET,COUNTER MOUNT,SPRING L	1	EA	M
1	A383620-2	BUSHING,SPACER,SPRING LOADED R	1	EA	M

Part Number A383276-FR * INST,MECH COUNTER,FRONT REEL,SPRING LOADED

Level	Part Number	Description	Quantity	U/M	SC
1	A220982	WHEEL,COUNTER,TRUMETER,ALUM.,R	1	EA	P
1	A220983	COUNTER,TRUMETER,TOP GOING,FEE	1	EA	P
1	A338784	WELDMENT,MOUNTING BRACKET,COUN	1	EA	M
1	A338784-FR	BRACKET,COUNTER BASE,FRONT REE	1	EA	M
1	A383301	ROD,COUNTER MOUNT,SPRING LOADE	1	EA	P
1	A383302	CAM,ADJUSTABLE,COUNTER MOUNT,S	1	EA	P
1	A383303	SPRING,COUNTER MOUNT,SPRING LO	1	EA	P
1	A383303-2	SPRING, TENSION, THROTTLE RETU	1	EA	P
1	A383620-1	BRACKET,COUNTER MOUNT,SPRING L	1	EA	M
1	A383620-2	BUSHING,SPACER,SPRING LOADED R	1	EA	M

TRUMETER REEL COUNTER (2014 Rev.)

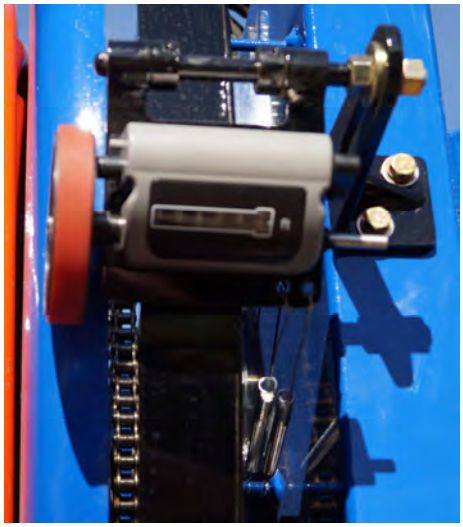

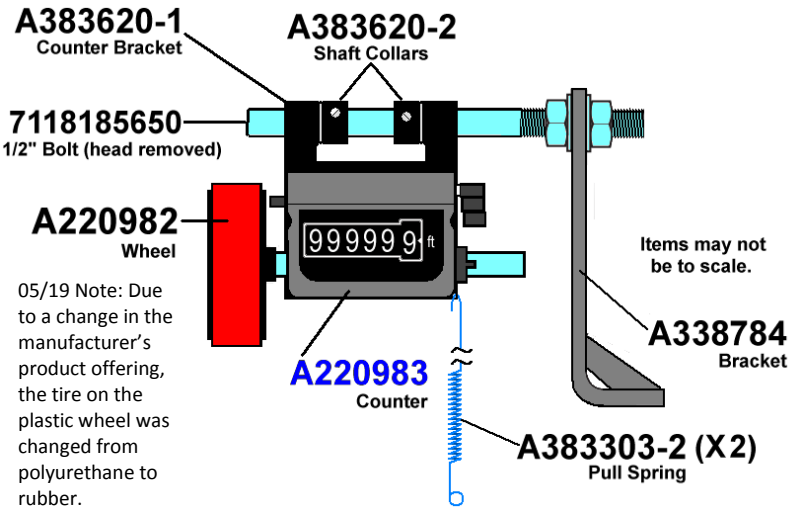

05/19 Note: Due to a change in the manufacturer's product offering, the tire on the plastic wheel was changed from polyurethane to rubber.

KITS

Part Number A383276-KIT KIT,TRUMETER RIM COUNTER,REAR REEL

Level	Part Number	Description	Quantity	U/M	SC
1	A107332	SCREW,SET,#10-24 X 1/4",PLATED	1	EA	P
1	A220982	WHEEL,COUNTER,TRUMETER,ALUM.,R	1	EA	P
1	A220983	COUNTER,TRUMETER,TOP GOING,FEE	1	EA	P
1	A338784	WELDMENT,MOUNTING BRACKET,COUN	1	EA	M
1	A383303-2	SPRING,PULL,9.5"OAL,THROTTLE R	2	EA	P
1	A383620-1	SHAFT COLLARS	1	EA	M
1	A383620-2	BUSHING,SPACER,SPRING LOADED R	2	EA	M
1	7118160850	SCREW,CAP,HEX,3/8"-16 X 1"LG,G	2	EA	P
1	7118185650	SCREW,CAP,HEX,1/2"-13 X 7"LG,G	1	EA	P
1	7660180018	NUT,HEX,1/2"-13,GR8,YZ	2	EA	P
1	7950160051	WASHER,LOCK,3/8",HA,YZ	2	EA	P
1	7950160102	WASHER,PLAIN,3/8",SAE,HA,YZ	2	EA	P
1	7950180102	WASHER,PLAIN,1/2",SAE,HA,YZ	4	EA	P

Part Number A383276-FR-KIT MECH COUNTER,FRONT REEL,SPRING LOADED

Level	Part Number	Description	Quantity	U/M	SC
1	A107332	SCREW,SET,#10-24 X 1/4",PLATED	1	EA	P
1	A220982	WHEEL,COUNTER,TRUMETER,ALUM.,R	1	EA	P
1	A220983	COUNTER,TRUMETER,TOP GOING,FEE	1	EA	P
1	A338784	WELDMENT,MOUNTING BRACKET,COUN	1	EA	M
1	A338784-FR	BRACKET,COUNTER BASE,FRONT REE	1	EA	M
1	A383303-2	SPRING,PULL,9.5"OAL,THROTTLE R	2	EA	P
1	A383620-1	BRACKET,COUNTER MOUNT,SPRING L	1	EA	M
1	A383620-2	SHAFT COLLARS	2	EA	M
1	7118160850	SCREW,CAP,HEX,3/8"-16 X 1"LG,G	2	EA	P
1	7118185650	SCREW,CAP,HEX,1/2"-13 X 7"LG,G	1	EA	P
1	7660180018	NUT,HEX,1/2"-13,GR8,YZ	2	EA	P
1	7950160051	WASHER,LOCK,3/8",HA,YZ	2	EA	P
1	7950160102	WASHER,PLAIN,3/8",SAE,HA,YZ	2	EA	P
1	7950180102	WASHER,PLAIN,1/2",SAE,HA,YZ	4	EA	P

INTEL-A-COUNT HISTORY

This parts bulletin is being supplied to provide parts identification and retro-fit information for the Intel-A-Count™ electronic footage counter.

OBJ-2430D Original Intel-A-Count™ (Obsolete)

This is the original electronic digital footage counter system we introduced on Aquatechs in 2006. Our supplier discontinued this design in 2010 when they could no longer get the 2" LED display module from their supplier.

A384156 Intel-A-Count II™ (Obsolete)

This is the second generation electronic digital footage counter system. It featured a smaller black & greenish gray LCD screen.

The company that made this for us sold the product line to another company who since then has gone out of business. No service components are available.

A384161-1 Intel-A-Count III™

The latest electronic digital footage counter system is a complete departure from the earlier designs and consists of a pedestal mounted 3.5" display, a separate digital control module and red anodized aluminum encoder. System operates on 9 to 32 VDC.

To retro-fit the Intel-A-Counts I & II with a Intel-A-Count III on the B-Series, order p/n A338664-7-F

For a complete new installation (including drive components) on a B-Series, order p/n A338664-7

INTEL-A-COUNT PARTS

Description	Intel-A-Count	Intel-A-Count II	Intel-A-Count III
Basic Kit	OBJ-2430D *NLA*	A384156 *NLA*	A384161-1
Display Unit	OBJ-2430K *NLA*	A384153 *NLA*	A384161-1-DIS
Encoder	OBJ-2429 *NLA*	A384154 *NLA*	A384161-1-ENC
Arm	--	--	A255027
Connector Plug	*NLA*	*NLA*	A384161-1-PLG
Harness	Integral with Encoder	Integral with Encoder	A384161-1-HAR
I/O Module	--	--	A384161-1-MOD
Mounting Base	--	--	A255028
Mounting Bracket	OBJ-2430D-1 *NLA*	A383986	--
Sunshield	OBJ-2430D-2 *NLA*	A383987	--

Base Mount
Part #A255028

Arm Mount
Part #A255027

INTEL-A-COUNT III

PART NUMBER	DESCRIPTION	U/M	SC	A338664-7	A338664-7-60-ALW	A338664-7-ALW	A338664-7-F (Retro)	A338664-7-OBM	A338664-7-OBM-F (Retro
A103532	SCREW,SET,#10-32 X 1/2",PLATED	EA.	P	1	1	1	1	1	1
A105202	SCREW,CAP,1/2-13 X 2-1/2",HH,P	EA.	P	4	4	4			
A107226	WASHER,FLAT,1/2" USS,PLATED,GR	EA.	P	4	4	2			
A222280	GREASE ZERK,1/4"-28,45 DEGREE	EA.	P	2	2	1			
A255027	MOUNT,ARM,1"DIA BALL,DOUBLE SO	EA.	P	1	1	1	1	1	1
A255028	MOUNT,BASE,1"DIA BALL,ROUND BA	EA.	P	1	1	1	1	1	1
A304987	SPROCKET,#40,15 TOOTH,3/4 BORE	EA.	P	1	1				
A338664-7-MAN	HOSE REEL COUNTER USERS MANUAL	EA.	M				1		1
A382507-1	MOUNTING BLOCK,SHAFT,INTEL-A-COUNT	EA.	M	2					
A382509	COLLAR,SHAFT,3/4" 2-PC. CLAMP	EA.	P	2	1	1			
A382509-1	COLLAR,SHAFT,3/4,STEEL WITH SE	EA.	P		1	1			
A382511	3/16" SQ. KEY x 1 1/4" LONG	EA.	M	1	1	1			
A382513	BEARING,THRUST,3/4"X 1-9/16"X	EA.	P	2	1				
A382514-5	SHAFT,INTEL-A-COUNT,B-SERIES	EA.	M	1					
A382514-6	SHAFT,WHEEL/ENCODER,AUTOLEVELI	EA.	M			1			
A382514-7	SHAFT,ENCODER,AUTO LEVELWIND,6	EA.	M		1				
A382598	SPROCKET,#60-20TOOTH,3/4" BORE	EA.	P	1	1	1			
A382709-2	SHAFT MOUNT ASSEMBLY,INTEL-A-C	EA.	M		1	1			
A384161-1	HOSE REEL COUNTER KIT	EA.	P	1	1	1	1	1	1
A388219	ADAPTER,ENCODER,6 MM SHAFT,OBR	EA.	M						1
A388219-1	ADAPTER,ENCODER,6 MM SHAFT,AQU	EA.	M				1		
A388220	BRACKET,ENCODER MOUNTING,AQUATECH	EA.	M	1	1	1	1		
7101100825	SCREW,PHILLIPS PAN,#10-32 X 1"	EA.	P	4	4	4	4	4	4
7118140650	SCREW,CAP,HEX,1/4"-20 X 3/4"LG	EA.	P	2	2	2	2		
7118141250	SCREW,CAP,HEX,1/4"-20 X 1-1/2"	EA.	P	2	2	2	2	2	2
7126110750	SCREW,CAP,HEX,4MM-0.7 X 10MM L	EA.	P	3	3	3	3	3	3
7660103000	NUT,K-LOCK,#10-32,CS,Z	EA.	P	4	4	4	4	4	4
7660141010	NUT,LOCK,1/4"-20,GRC,Z	EA.	P	4	2	4	4	2	2
7950140102	WASHER,PLAIN,1/4",SAE,HA,YZ	EA.	P	6	2	6	6	2	2
7951110210	WASHER,LOCK,4MM,CS,Z	EA.	P	3	3	3	3	3	3

NOTE: RETRO KITS ARE FOR INSTALLING THE INTEL-A-COUNT III ON UNITS THAT PREVIOUSLY HAD THE INTEL-A-COUNTS I OR II INSTALLED.

SUFFIX GLOSSARY

ALW = Automatic Level Wind
OBM = O'Brien Manufacturing
F = Field Kit

B-Series Intel-A-Count™ Chain Drive Parts

ITEM	PART NO.	DESCRIPTION	SINGLE BEARING, EARLY INTEL-A-COUNT I	TWO BEARING, INTEL-A-COUNT I & II	TWO BEARING INTEL-A-COUNT III	WITH AUTOMATIC LEVEL WIND
1	25396	SCREW, SET, 1/4"-28 X 1/4", ALLOY	1	1		
1	A103532	SCREW, SET, #10-32 X 1/2", PLATED			1	1
2	A105202	SCREW, CAP, 1/2-13 X 2-1/2", HEX HEAD, PLATED	4	4	4	4
3	A107226	WASHER, FLAT, 1/2" USS, PLATED, GR	4	4	4	4
4	A222280	GREASE ZERK,1/4"-28,45 DEGREE		2	2	2
5	A382709-1	SHAFT MOUNTING FLANGE, SINGLE BLOCK	1			
N.I.	A382709-2	SHAFT MOUNT, AUTO LEVEL WIND				1
6	A382507-1	SHAFT MOUNTING FLANGE, 2 BLOCK DESIGN		2	2	
7	A382509	COLLAR, SHAFT, 3/4" 2-PC. CLAMP	2	2	2	1
N.I.	A382509-1	COLLAR, SHAFT, 3/4"				1
8	A382511	KEY, 3/16" X 3/16" X 1-1/4"L		1	1	1
9	A382513	BEARING, THRUST, 3/4" X 1-9/16" X	2	2	2	2
10	A382514-1	SHAFT, INTEL-A-COUNT, .316" ENCODER HOLE	1	1		
11	A382514-5	SHAFT, INTEL-A-COUNT, .238" ENCODER HOLE			1	
N.I.	A382514-6	SHAFT, INTEL-A-COUNT, AUTO LEVEL WIND				1
12	A382598	SPROCKET, #60, 20 TOOTH, 3/4" BORE	1	1	1	1
13	A107298	LOCK WASHER, 1/2", PLATED, G8				
N.I.	A382512	SLEEVE BEARING (INCLUDED WITH ITEM 5 & 6)	2	2	2	
N.I.	A388220	BRACKET,ENCODER MOUNTING			1	1

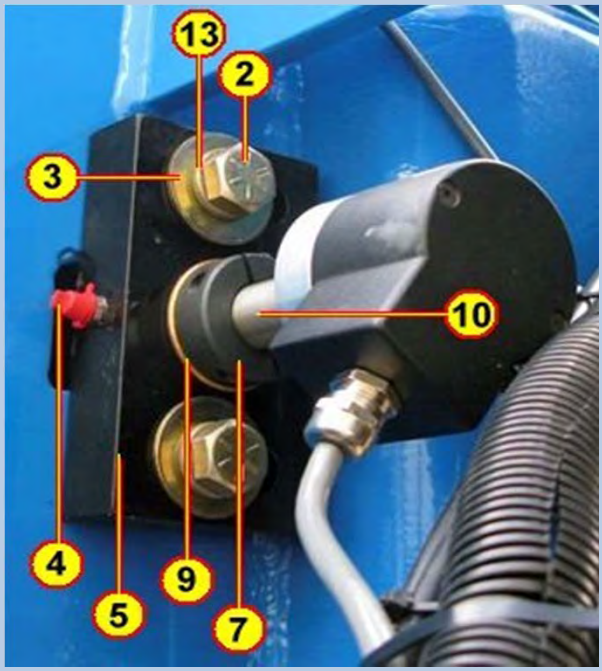

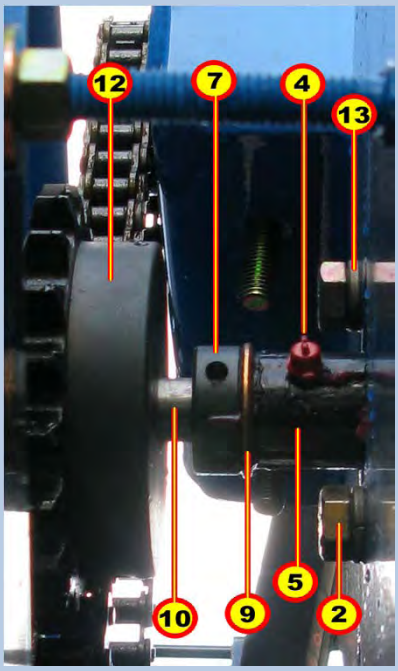

1 BLOCK INSTALLATION

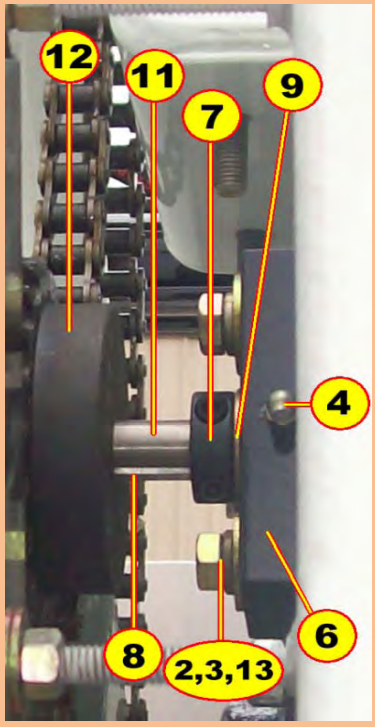

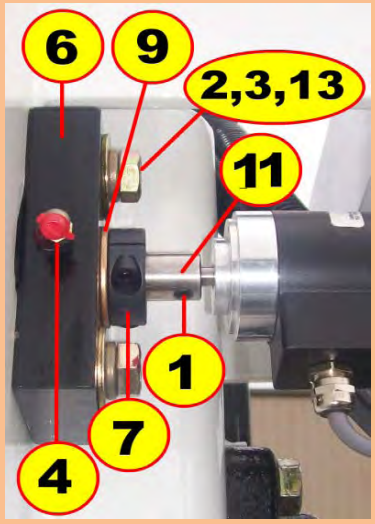

2 BLOCK INSTALLATION

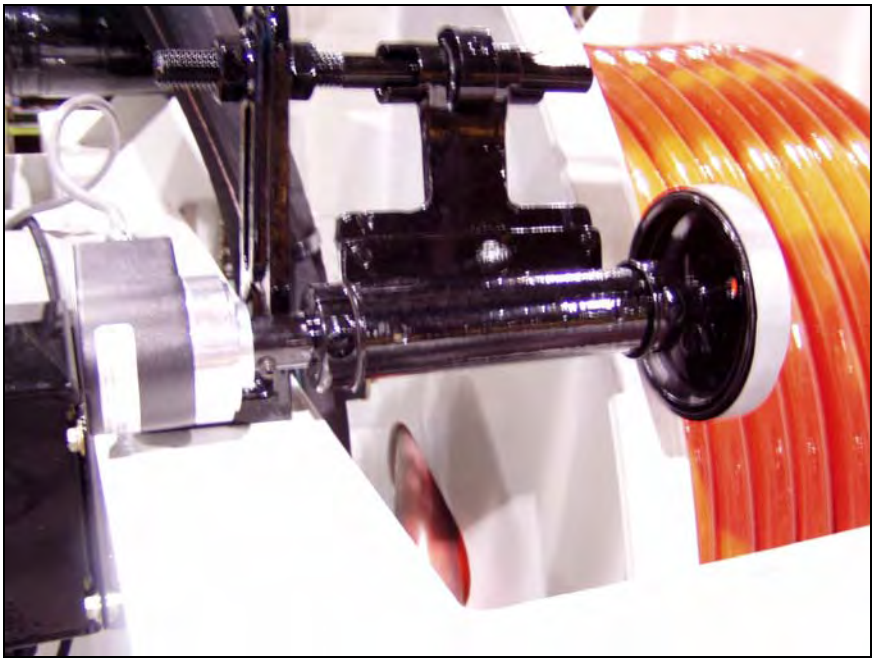

Part Number A338664-1 * INTEL-A-COUNT OPTION,SPECIAL

RE Comment: FOR USE ON UNITS WITHOUT SWITCH

Level	Part Number	Description	Quantity	U/M	SC
1	A220981	COUNTER,HOSE REEL,TRUMETER SER	1	EA	P
1	A382514-2	SHAFT,WHEEL/ENCODER,SPECIAL	1	EA	M
2	U4509-0079	BAR STK,RND,3/4" DIA,304SS	.7187	FT	P
1	A382709	SHAFT MOUNT	1	EA	M
2	02-2313	PIPE STK,SCH80,1"NOM.,RANDOM L	.3750	FT	P
2	U4504-0011	BAR STK,FLT,1/4"X 2",HRS,A36	.3646	FT	P
2	A382512	BEARING,SLEEVE,BRONZE 3/4 x 1	2	EA	P
2	A152040	GREASE FITTING,1/8" NPT	2	EA	P
1	A382509	COLLAR,SHAFT,3/4 TWO PC. CLAMP	2	EA	P
1	A382513	BEARING,THRUST,3/4"X 1-9/16"X	2	EA	P
1	OBJ-2430D	*OBS* INTEL-A-COUNT W/ ENCODER	1	EA	P
1	A222280	GREASE FITTING,45 DEGREE	2	EA	P